DESIGN AND DEVELOPMENT OF AN EVAPORATIVE COOLING SYSTEM FOR FRESH FRUIT AND VEGETABLE STORAGE

BY

ENGR. OKAFOR, VICTOR C.

(20064734938)

B. ENG. (HONS.) AGRICULTURAL ENGINEERING, FUTO

A THESIS SUBMITTED TO THE POSTGRADUATE SCHOOL

FEDERAL UNIVERSITY OF TECHNOLOGY, OWERRI

IN PARTIAL FULFILLMENT OF THE REQUIREMENTS FOR THE AWARD OF THE DEGREE OF MASTER OF ENGINEERING

(FARM POWER AND MACHINERY OPTION)

SEPTEMBER, 2011

Design and development of an evaporative cooling system for fresh fruit and vegetable storage. By Okafor, V. C.is licensed under a Creative Commons Attribution-NonCommercial-NoDerivatives 4.0 International License.

CERTIFICATION

This is to certify that **OKAFOR, VICTOR C.** a postgraduate student with registration number **20064734938**, has satisfactorily completed the requirement for the research work towards the award of the Degree of Masters in Engineering, Agricultural Engineering of the Federal University of Technology, Owerri.

Engr. Prof. G.I. Nwandikom
Supervisor

Signature/Date

Engr. Prof. N.A.A. Okereke
Head of Department

Signature/Date

Engr. Prof. D.S. Zibokere
External Examiner

28/09/2011

Signature/Date

Engr. Prof. C.D. Okereke
Dean, Postgraduate School

Signature/Date

DEDICATION

This work is dedicated to the MOST HIGH GOD, for His protection and sustenance throughout the period of this study.

ACKNOWLEDGEMENT

The process of acquiring knowledge is no doubt a tedious one, but when individuals who feel that one should not only learn but also know, simplify this process, it calls for sincere appreciation. It is on this note that, I wish to express appreciation to my project supervisor Engr. Prof. G. I. Nwandikom for directing and monitoring the completion of this work.

I also acknowledge the effort of all the staff in the Department of Agricultural Engineering especially Engr. S. N. Asoegwu for his professional advice.

TABLE OF CONTENTS

DEDICATION……..……..i

AKNOWLEDGEMENT…….…….…….ii

ABSTRACT……...…….....iii

TABLE OF CONTENTS……..…iv

LIST OF TABLES……..……..x

LIST OF FIGURES…….....xi

LIST OF PLATES…….…….……xii

CHAPTER ONE

01 INTRODUCTION……..……...……..…….1

1.1 General Background …….……..…..……...1

1.2 Statement of Problem …….……..……...3

1.3 Justification……..…….....4

1.4 Objective of the Project……..…….……..……..….5

CHAPTER TWO:

2.0 LITERATURE REVIEW…….....……6

2.1 Developments in the Field of Evaporative Cooling……..……...…6

2.2 Factors Responsible for Deterioration in Fruits and Vegetables……...……9

2.2.1 Physiological Activities……..……..9

2.2.2 Pathological Infection…….……10

2.2.3 Mechanical/Physical Injuries…….....10

2.2.4 Evaporation of Water…….11

2.3 Factors Affecting the Storage Life of Fruits and Vegetables……11

2.3.1 Variety and State of Ripening……..……..…11

2.3.2 Environmental Conditions……..…….12

2.3.2. Temperature...……12

2.3.2.2 Relative Humidity……..……..13

2.4 **P**ost-Harvest Changes in Quality of Fruits and Vegetables…….....14

2.4.1 Colour…….……....15

2.4.2 Weight Loss……..…….....15

2.4.3 Fruit Firmness Change……..…….....16

2.5 Principle of Evaporative Cooling…….……..……16

2.5.1 Evaporative Cooling and Psychometric ……....17

2.5.2 Factors Affecting Evaporative Cooling……...……...17

2.5.2.1 Relative Humidity of the Air……....17

2.5.2.2 Air Temperature……..…….....18

2.5.2.3 Air Movement (velocity)…….....18

2.5.2.4 Surface Area Exposed to Air ……..…….……...18

2.6 METHOD OF EVAPORATIVE COOLING……19
2.6.1 Direct Evaporative Cooling ……..……..……..19
2.6.2 Indirect Evaporative Cooling……..……..……19
2.7 Cooling Pad Materials…….……..……....20
2.8Forms of Direct Evaporative Cooling System…….....21
2.8.1 Passive- Direct Evaporative Cooling System ……....21
2.8.2. Non-Passive (active) Direct Evaporative Cooling System……..……..22
2.9 Thermodynamics of Heat and Mass Transfer during Evaporative Cooling……...……23
2.9.1 Heat and Mass Transfer……..……23
2.9.2. Dynamics of Heat Conduction……...……..……24
2.9.2.1Heat Flow through Walls…….……...…….....25
2.9.3 Vapor Transmission through Materials…….…….....28
2.9.4 Heat and Mass Balance for the Pad-End……...….....29
2.9.5 Heat Load of the Evaporative Cooler…….…33
2.9.5.1 Heat Gained By Conduction Through the Walls, Roof and Floor of the Cooler…….....33
2.9.5.2: Respiratory Heat Load of the Product……33
2.9.5.3: Field Heat of the Product……34
2.9.5.4: Infiltration of Air…….....34

CHAPTER THREE

3.0 Design Concept …….....35

3.1 Description ……...…….....35

3.2 Principle of Operation ……..……....35

3.4 Material of Construction ……...……..…….……..36

3.4.1Features of the Cooler …… 36

3.4.1.1Absorbent Material …….....36

3.4.1.2: Water Distribution ……..……...37

3.4.1.3: Storage Cabin …….…...……38

3.4.1.4: Fan Position at the base of the Storage Cabin ……..…….38

3.5: Experimental Methods and Procedure ……39

3.5.1: No-load Test of the Evaporative Cooler ……...39

3.5.1.1 Temperature and relative Humidity Measurement ……39

3.5.1.2Determination of Air Distribution Inside the Storage Cabin …….40

3.5.1.3 Experimental Determination of the Effect of Thickness of the Absorbent Material on the Efficiency of the System…….…..…40

3.5.2: Load Test of the Evaporative Cooling System……..…41

3.5.2.1: Physiological Weight Lost……..…42

3.5.2.2: Colour Change…….....42

3.52.3: Firmness Change……..……...…….....42

CHAPTER FOUR

RESULTS AND DISCUSSION

4.0: No load Test of the Evaporative Cooling System……49

4.1: Results of Temperature and Relative Humidity Readings of the Evaporative Cooling System (ECS) (without products)…….……49
4.1.1 Temperature……..……..49
4.1.2 Relative Humidity.……..50

4.2: Result of Temperature Variation at Different Locations Inside the Evaporation Cooling Chamber Compared to the Ambient and Cooling Pad Temperatures……..…….……..52
4.2.1 Analysis of variance (anova) for temperature variation……53
4.3: Result of the Effect of Pad Thickness on the Efficiency of the System……..54
4.4 Results of Load Test of the Evaporative Cooling System…..……57
4.4.1 Result of Load Test of Evaporative Cooling System with Fruited Pumpkin Leaf……57
4.4.1.1 Analysis of Variance for Fruited Pumpkin Leaves …….60

4.4.2. Result of the Load Test using Okra…...……61

4.4.2.1 Analysis of Variance for Okra…..……..…..……63
4.5: Firmness Test for Okra……..……..……...…64
4.6: Result of the Load Test with Garden Egg……..……67
4.6.1: Analysis of Variance for Garden Egg.....69

4.7 Colour Observation…….……70

4.8 Firmness Test for Garden Egg……..……..73

4.9 Result of the Load Test with Carrot……74

4.9.1 Analysis of Variance for Carrot……...76
4.10 Colour Observation for Carrot……..……...…77

4.11 Crispiness Change for Carrot…….....82

CHAPTER FIVE

CONCLUSION AND
RECOMMENDATION……...…….83

REFERENCES……...……8
4

APPENDIX…….90

APPENDIXA

Temperature Variation at Different Locations inside the Evaporative Cooling Chamber, Compared to the Ambient and Cooling pad Temperature….....91

APPENDIX B

DB, WB, RH of the System Compared to Ambient with Different Pad Thickness……..……92

APPENDIX C

Experimental data for vegetable (pumpkin leaf)……97

APPENDIX D

Experimental data for okra……...98

APPENDIX E

Experimental data for garden Egg……..……102

APPENDIX F

Experimental Data for Carrot…….....106

APPENDIX G

Evaporative Cooler Design ……109

APPENDIX H

Rates of Evolution of Heat by Fresh Fruits and Vegetable when stored at various Temperatures …….....115

LIST OF TABLES

Table 4.1 Temperature and relative humidity readings (without product)…...50

Table 4.2: Temperature variation at different location inside the evaporative cooling system…….53

Table 4.3: Efficiencies of the evaporative cooling system with different pad thickness……..54

Table 4.4: Average efficiencies of the pad thicknesses…….55

Table 4.5: Average cooling efficiencies for the different pad thickness over the period of the experiment…….....53

Table 4.6: Percentage weight loss of product in evaporative cooling condition compared with that of ambient……58

Table 4.7: Total weight and percentage weight loss of Okra for both evaporation cooling chamber and Ambient Condition……61

Table 4.8: Experimental data for the firmness test on Okra……..64

Table 4.9: % Wt loss per day for Garden egg……67

Table 4.10: Colour chart for Garden Egg…….70

Table 4.11: Colour change of Garden Egg during the experiment……71

Table 4.12: Experimental data for the firmness test on Garden Egg……73

Table 4.13: Total weight and % weight loss of Carrot…….75

Table 4.14: Colour chart for Carrot……..77

Table 4.15: Colour change of Carrot during the experiment……78

Table 4.16: Experimental data for the firmness test on Carrot…….80

Table 4.17: crispiness chart for carrot……82

Table 4.18: Crispiness change during the period of experiment……82

LIST OF FIGURES

Figure 3.1: Isometric view of the Evaporative cooling system……45

Figure 3.2: Orthographic view of the Evaporative cooling System……46

Figure 3.4: Sectional view of the Evaporative Cooling System ……..….47

Figure 3.5: Exploded view of the Evaporative Cooling System ……..……48

Figure 4.1: Temperature at the exit of cooling pad compared to dry bulb and wet bulb temperatures (without product)……..……49

Figure 4.2: Relative humidity of the cooling Pad compared to that of Ambient…….…..49

Figure 4.3: Efficiencies of the different pad thickness against cooling

Figure 4.4: Graphical comparison of the % weight loss of produce in both period……...55

Evaporative cooler and Ambient Condition over cooling period...58

Figure 4.5: Graphical comparison of weight loss of OKRA kept in the Evaporating cooling chamber with that of control experiment…59

Figure 4.6: Graph of the firmness test for Okra……65

Figure 4.7: Comparison of % weight loss of Garden Egg for both Evaporating cooling chamber and control experiment……68

Figure 4.8: Graph of the Firmness Test of Garden Egg……74

Figure 4.9: % Weight loss of carrot against cooling period ……....75

Figure 5.0: Graph of the Firmness Test for Carrot……...81

LIST OF PLATES

Plate 3.1Pictorial view of the Evaporative cooling machine……..43

Plate 3.1Firmness Testing Machine……44

Plate 4.1 Picture of the fluted Pumpkin Leaves at Different stages of the Experiment……59

Plate 4.2 Picture of the vegetable crop (Okra) at different stages of Experiment……66

Plate 4.3 Picture of Garden Egg at different stages of the Experiment…...72

Plate 4.4 pictures of the Carrot at different stages of the Experiment……..79

ABSTRACT

An evaporative cooling system was developed with locally available materials. The system was aimed at providing lower temperature and higher relative humidity necessary for extending the shelf life of fruits and vegetables. The performance of the cooler was evaluated in terms of temperature drop, humidity gain, cooling efficiency and quality assessment of the stored products. Two categories of test were carried out on the cooler with the chosen absorbent materials: the no-load test and the load test. At no load, the evaporative cooler maintained a temperature reduction of 30% and humidity increase of about 200% compared to the Ambient Conditions. The ambient lost about 77% by weight of fluted pumpkin leave in three days but the Evaporative Cooling System lost that same amount in seven days. Okra lost about 33.4% by weight in seven days in Evaporative Cooling System but almost that same amount in the first day in Ambient Condition. Also Garden Egg lost about 6.83% in seven days in Ambient Condition. Carrot lost 7.4% by weight in Evaporative Cooling System in four days that same amount was lost in first day in the Ambient Condition. The statistical analysis of the result of the experiment on the effect of pad thickness on the efficiency increases as the pad thickness increases, but beyond a pad thickness of 12mm, there is no significant increase in the efficiency. The shelf life of fluted pumpkin, okra, garden egg, and carrot were extended by five days, nine days, fourteen days and twenty one days respectively relative to ambient storage.

CHAPTER ONE

1.0 INTRODUCTION

1.1 GENERAL BACKGROUND

Vegetables and fruits are very important food items that are widely consumed by man and animal all over the world.

Vegetable is the fresh tender portion of plant with high moisture content while fruits are the fertilized mature ovary of flowers or plant. Fruits and vegetable are essential components of a balanced diet. That is why they constitute important part of the world agricultural production, even though their production volumes are small compared with grains. Fruits and vegetable are important sources of digestible carbohydrates, minerals and vitamins A and C. in addition they provide roughages (indigestible carbohydrates) which are needed for normal healthy digestion (Salunkhe and Kadam, 1995). But one major problem they have is they are easily perishable.

The market for tropical fruits and vegetables has expanded beyond Asia, Hispanic and other ethnic communities as individuals and organization have become more interested in their health, as well as the potentials of vegetables in providing health building nutrient (Mc George,1987). For this reason, international commerce in fruits and vegetable has so much expanded over the past few decades. Tons of produce are now shipped daily over long distances both within countries and internationally. Hence huge investment are being channeled into handling, transportation, storage and marketing in order to maintain a continuous supply of these perishable

commodities (wills el at, 1981). UNIDO (1979), estimated that between 1979 and 1980, food processing industries accounted for more than one fifth of all manufacturing industries in developing countries and a substantial part of the raw materials are sourced from fruits and vegetables which are processed into other forms. This further stresses the importance of fruits and vegetables in the economic and industrial development of developing countries, among which Nigeria is one.

The most abundant constituent of fruits and vegetables is water. In their fresh form most fruits and vegetables contain more than 80 percent water with some varieties such as cucumber, lettuce and melons containing about 95% water (sanni, 1999). This is why vegetables are generally classed as perishable crops. After harvest they shrivel, wither or rot away rapidly, particularly under hot tropical conditions. The damage that occurs in these crops is as a result of physiological changes or pathological attack and physical damage or a combination of the factors.

Common physiological changes that affect vegetables are enzymes' activities, respiration and moisture changes caused by environmental conditions. The bacteria attack due to high water activity constitutes pathological damage. Direct bruise make up the mechanical damage.

The environment for safe and prolonged storage of perishable commodities must therefore be one of high humidity and low temperature. This will retard moisture loss, respiratory process and activities of micro-organisms (pathogens) which are the most destructive activity during storage of vegetable crops (Barre el at, 1988). Uniform air circulation is major requirement in storage room and it is important to remove product heat entering through door opening and building surfaces (Ajibola 1991).

Orderly marketing of perishable commodities often requires storage to balance day to day fluctuations between products harvest and sales. For a few products like fruits and vegetables, long-term storage is used to extend marketing beyond the end of harvest season. Long-term storage is sensible only if the products gain enough value during the storage period to pay for the cost of storage. To minimize products quality loss, the storage must:

1) Slow biological activity in the products by maintaining the minimal temperature that will not cause freezing or chilling injury.
2) Reduce product moisture loss and resulting wilting and shrivel by reducing the difference between products and ambient temperature and maintaining high humidity in the storage room.

1.2 Statement of Problem

The importance of vegetable to the house hold as a source of vitamin, mineral, vegetable oil and protein in our diet cannot be overemphasized due to its ability to meet substantial part of nutritional requirement, and also as a source of income to the farmers. Fresh fruits and vegetable have flavor, aroma and color and are essential for normal health. They are sources of dietary fiber, vitamins and minerals. Unfortunately there are inadequate, inefficient and in-effective storage facilities to conserve, and preserve them for effective supply, distribution and marketing. Losses of fruits and vegetables occur everywhere from the field to the ultimate consumer and depend on the degree of perishability of the produce. Fresh fruits and vegetables deteriorate easily when stored under ambient conditions mainly due to physiological and microbial activities, which are accelerated at high temperature and low relative humidity of the storage environment (wills et al, 1981).

The work is therefore aimed at developing a maintainable and sustainable storage chamber for vegetables suitable for our environment and level of technology.

1.2 JUSTIFICATION

Adequate storage of fruits and vegetables prolongs their usefulness; checks market gluts, provides a wider selection of fruits and vegetables throughout the year and increases the financial gain to the producer by reducing subsequent losses.

Some methods of preservation of raw and processed fruits and vegetables includes: storage in ventilated shed, storage at low temperature, use of evaporative coolant system, waxing and other chemical treatments. Though, refrigeration is becoming popular in developing countries, but it has been observed that several fruits and vegetables e.g. plantain, banana, mango etc. cannot be stored in the domestic refrigerator for sufficiently long period because they are susceptible to chilling injury (Shewfelt, 1994; Olusunde et al. 2009). Apart from this, the cost of refrigerators is beyond the reach of common farmers in the rural communities coupled with irregular power supply. Although, development of improved storage technology for fruits and vegetable crops is beneficial in extending shelf life and maintaining the quality of produce, but lack of capital may force the former to ignore the use of high storage technology even when available and effectively managed.

FAO (1983) advocated a low cost storage system based on the principle of Evaporative cooling for the storage of fruits and vegetables,

which is simple, and relatively efficient. The basic principle relies on cooling by evaporation.

1.3 OBJECTIVES OF THE PROJECT

The objectives of this work are to:

1) Develop an effective cold storage system based on the principle of evaporative cooling, using locally available materials, for the storage of fresh fruits and vegetables.
2) Evaluate the storage quality of some fruits and vegetable crops stored in the system.
3) Determine the effect of the thickness of the absorbent material on the efficiency of the system.

CHAPTER TWO

2.0 LITERATURE REVIEW

2.1 DEVELOPMENT IN THE FIELD OF EVAPORATIVE COOLING

Evaporative cooling is a natural psychometric process that is capable of lowering air temperature while simultaneously increasing the relative humidity. The process is that of converting the air sensible heat into latent heat of vaporization. Evaporative cooling is a very good economical substitute in most tropical countries where the hot weather conditions makes natural evaporation of water an effective method of achieving cooled and humidified environment. Many researchers have gone into the development of evaporative cooling systems with respect to storage of fruits and vegetable crops, animal housing and human habitant as well as green house for plant growth.

This method of cooling was employed by wiersma (1983), to improve the environmental temperature in animal shelter. He reported that the optimum environmental temperature cannot be obtained but can be improved as the average wet bulb temperature is the lowest temperature that may be obtained. Thompson (1983) used the evaporative cooling method to preserve leafy vegetable, tomatoes and plantain. He reported that leafy vegetable were able to keep for about five days effectively and green tomatoes were free from scars, when stored for three weeks while plantain also kept for three weeks. He also

noted that the wind speed has substantial effect on cooling at lower temperatures.

Evaporative coolers, rely on wind pressure to force air through wet pads, into a storage chamber. Some have been developed in some developing countries such as in India, China and Nigeria (FAO. 1986).

Rusten (1985) worked extensively in developing various evaporative systems by trying to use locally available materials such as jute material, cotton fabrics etc. He also worked on the use of mechanical fan to draw air through continuously wetted pads. The continuously wetting of the pad was achieved by placing elevated water basins on the fabric material, which will absorb the water gradually and eventually get saturated. Rusten also investigated the works of other researchers who worked on such areas as using deep molded tabular blocks to build evaporative coolers using heat exchangers to improve the efficiency of cooling, use of plastic heat exchanges in the development of indirect evaporative coolers. He also investigated on cooling and freezing of water by alternative source of energy, based on the principle of evaporative cooling.

Manuwa (1989) carried out investigations on pad materials and shapes for constructing evaporative coolers. The pad materials used were jute, latex foams, charcoal and wood shavings while the shapes were hexagonal and square cross-sections. He claimed that the hexagonal has greater saturation efficiency when used with jute pad than the square cooler. This may be due to inadequate exposure of water by the square cooler to the air.

Abdalla and Abdalla (1995) have worked on the development of fan driven evaporative coolers. The research was to study the suitability of using palm-leaves as the wetted medium. The research was engendered by the availability of palm leaves in Saudi Arabia. They

claimed that the palm leaves could be substituted as cooling pad for the expensive pad materials being imported.

Sanni (1999) worked on the development of an evaporative cooling system for the storage of vegetable crops. The development of evaporative cooling system was provided with a means of regulating fan speed, water flow rate and wetted pad thickness, all of which made it possible to vary the temperature and relative humidity inside the storage chamber. The system also provide the flexibility needed for carrying out further research and its optimization, and gaining further fundamental insight into the underlying principles and governing mechanism of evaporative cooling.

Jain (2007) presented a two stage Evaporative cooler for fruits and vegetable which incorporated a heat exchanger. This design is expensive but he could only achieve a storage life of 14 days for tomato; Anyanwu (2004) developed a porous wall (pot in pot) Evaporative cooler for preservation of fruits and vegetables. He got a storage life of less than four days (93 hours) on tomato

Literature reviews of the local efforts in Nigeria to build storage systems for fruits and vegetable crops reveal that improvement of existing systems in Nigeria is greatly needed. In order to resist mass importation of commercial evaporative coolers and thus save foreign exchange and enhance indigenous technological development, it is absolutely necessary to develop indigenous storage systems using locally available materials.

2.2 FACTORS RESPONSIBLE FOR DETERIORATION IN FRUITS AND VEGETABLES

Fruits and vegetables are characterized by soft tissues being made up of parenchyma cells, high moisture content, usually 70% to 95% and high rate of physiological activity. According to Ndirika and Asota, (1994), the damage that occurs in some bio products is primarily by loss of moisture, change in composition and pathological attack. There are many factors responsible for deterioration of fruits and vegetables. These factors can be grouped under physiological activity, pathological infection and physical factor.

2.2.1 PHYSIOLOGICAL ACTIVITIES

Fruits and vegetables, although detached from the parent plant, continues their normal physiological activities, like respiration, ripening and other metabolic activities, and since they are cut off from their normal food supply from the parent materials, the fruits and vegetables are now dependent entirely on their food reserves and moisture in their environment or exposure. Therefore losses of irrespirable substrate and moisture are not made up and hence deterioration sets in. Ripening transforms a physiological mature but inedible plant organ into a visually attractive and edible organ.

Respiration increases with ripening. Thus, ripening brings about many changes in the chemical composition of fruits resulting in softening of issues. Some major changes which together make up fruits ripening are; seed maturation, abscission, production of volatile compounds, development of wax on the skin and changes in; color, respiration rate, rate of ethylene production, tissues permeability,

composition of pectin substances and carbohydrates, organic acids and protein.

2.2.2 PATHOLOGICAL INFECTION

Pathological infection of fruits and vegetables can originate in the field, at harvest or in storage; through natural openings, breaks and other mechanical injuries on the skin, due to rough handling of the produce. Common disease organisms causing decay include Rhizopus, soft rot and fusarium rot on vegetable (wills et al, 1981). Insects and pests can cause considerable damage of fruits and vegetables through either complete removal of the fruits or feeding on them, thus causing skin breaks which may facilitate entry of decay organisms.

2.2.3 MECHANICAL/PHYSICAL INJURIES

Mechanical injuries could be cuts, bruises, cracking associated with rough handling and harvesting practices during harvest, packaging, transportation and marketing. Mechanical injuries provide entry sites for decay organisms and increase in respiration and other chemical changes in the fruits. For examples impact bruising of tomatoes result in higher respiration and ethylene production rate increased internal damage and lower levels of titratable acidity and ascorbic acid, which can alter taste and nutritive value (Aworh, 1988). Mechanical damage can also accelerate the rate of water loss from produce, bruising damages the surface organization of the tissue and allows a much greater flow of gaseous material through the damaged area.

2.2.4 EVAPORATION OF WATER

Although physiological activities and pathological infection account for a substantial part of the losses in fruits and vegetables, weight losses are of considerable importance (Valez et al, 1977, Hatfield and knee, 1988). Weight loss results from moisture loss via escape of water from the tissues when the fruits and vegetables are attempting to be at equilibrium with the environment, which is usually at lower water activity.

2.3 FACTORS AFFECTING THE STORAGE LIFE OF FRUITS AND VEGETABLES

The most important factors affecting the storage life of fruits and vegetables are:

i. Variety and stage of ripening at harvest
ii. Environmental condition.

2.3.1 VARIETY AND STAGE OF RIPENING

The nature, shapes, sizes of fruits and different cultural practices have significant influence on the storage life of fruits and vegetable. Spherical fruits have greater resistance to compress than fruits of flat shapes and hence are less susceptible to mechanical and other forms of deterioration (Hobson, 1981). Different varieties of fruits from different sources of production show significant differences in firmness values, resistance to mechanical injury and color changes during storage (Wills et al, 1981). Depending on the stage at which fruits are harvested, which in practice varies from mature green to fully ripened, the commodities have different storage conditions. Mature green fruits remain in good condition for a longer period and have greater resistance to mechanical

injury and infection by micro-organisms than fully ripened fruits (Stenvers et al, 1977).

2.3.2 ENVIRONMENTAL CONDITIONS.

The environmental factors during harvesting, transportation and storage directly affects the shelf life of the produce. The most important environmental factors influencing the deterioration process in fruits and vegetables are relative humidity (Wills et al, 1981)

2.3.2.1 TEMPERATURE

Low temperature, humidity and storage have been described as the most important physical method for post-harvest loss control (Seyoum and Woldetsolik, 2004).

Most of the processes responsible for the deterioration in fruits and vegetable in storage can be related to temperature, lowering the temperature of the storage environment can control metabolic reactions, micro-organisms activities and water loss through transpiration and evaporation (Brennan et al, 1990). The rate of metabolic reaction such as respiration and evaporation are slowed down at low temperature. The rate of growth and activity of micro-organisms are inhibited at low temperature. Hence storage at low temperature results in prolonged post-harvest life of fruits and vegetables.

However, produce containing water may freeze at 0°C. Once the tissue is frozen, the interchange of metabolites among the various cellular components is seriously hampered. Also the expansion of water upon freezing causes considerable damage to the cells. Upon thawing, the tissue fails to resume normal metabolism and to regain normal

texture. Ideally, the greatest reduction in respiration and general metabolism and thus longer life will be obtained if the produce is held just above its freezing point (Wills el al, 1981).

Apart from the consideration of frozen tissue, fruits and vegetables are all susceptible to low temperature (chilling) injury. There is minimum and maximum temperature for the storage of each type of fruits and vegetables, because their responses to reduced temperature vary widely.

2.3.2.2 RELATIVE HUMIDITY

Relative humidity is defined as the ratio of the pressure of water vapor in air to the pressure of water vapor in the saturated air at the same temperature and atmospheric pressure, expressed either as percentage or in decimal.

$$\emptyset = \frac{P_{va}}{P_{vs}} \times 100 \ldots\ldots 2.1$$

Where $\emptyset = Relative\ humidity\ in\ percentage$

$P_{va} = Presure\ of\ water\ vapor\ in\ air$

$P_{VS} = pressure\ of\ water\ in\ the\ saturated\ air$

The relative humidity of the storage environment together with temperature influence the loss of water from the produce, the activities of some bacterial and other physiological activities such as the onset of ethylene production in bananas and plantain (Gorge and Marriott, 1983); For fresh harvested produce, any method of increasing the Relative humidity of the storage environment (or decreasing the vapour pressure deficit (VPD) between the commodity and its environment) will slow

the rate of water loss and other metabolic activities (Katsoulas et al. 2001); If the relative humidity of the store is lower than the water activity of the produce, there will be loss of water through evaporation from the produce and at higher relative humidity the produce may absorb moisture. Loss of water from fruits and vegetables results in the loss of weight.

Water activity is defined as the water vapor pressure exerted by the crop relative to the saturated vapor pressure of the atmosphere at that temperature. A loss of weight of more than 6% of the harvest weight often results in an unattractive shriveled appearance (George and Marriott, 1983);

Desirable as high relative humidity is, provision of high relative humidity under static conditions encourages microbial attack and rotting of fruits and vegetables. Hence the high humidity air needs to be in motion to minimize the undesirable microbial attack. The evaporative cooling system brings about the reduction in temperature, increases the relative humidity of air and causes a continuous movement of the air.

2.4 POST-HARVEST CHANGES IN QUALITY OF FRUITS AND VEGETABLES

There are many quality changes that may occur during the post-harvest life of fruits and vegetables and the deterioration processes taking place in the produce bring about these. These changes vary depending on the type of produce. The most common post-harvest changes in the quality of fruits and vegetables include:

i. Colour
ii. Weight

iii. Firmness

2.4.1 COLOUR:

Maturation of fruit is completed and cease while the product is still on the plant. However, ripening and other chemical changes take place even after the fruit is detached from the parent plant. Most fruit on reaching full maturity are green in color due to the presence of chlorophyll (wills el al, 1981). Color is the most obvious change that occurs in many fruits and vegetables and is the major criteria used by consumers to determine whether the fruit is unripe, ripe, over-ripe or spoiled. Over-ripeness is closely followed by initial stage of rotting or spoilage, during which discoloration of the outer surface takes place (wills et al, 1981). Assessment of colour change is done by comparing the colour of the produce under investigation against a standard colour chart. Most colour charts for fruits and vegetables give numerical values for different ranges of colour from 1 to 6 for green to fully yellow/red respectively.

2.4.2 WEIGHT LOSS

Most produce contains more than 80% water. Water loss from the produce results in the loss of weight. A loss of weight of 6% will cause many fruits and vegetables to appear wilted or shriveled (George and marriot, 1983) and under warm, dry and low humid conditions, this can be noticed to some produce in a few hours of exposure (Wills et al, 1981). The loss of weight comprise of both respiratory and evaporative losses. The former, which occurs as a result of respiration, depends mainly on the temperature of the surrounding air. The latter occurs as a result of water vapour deficit of the environment compared with that of the produce (Dennis, 1979).

2.4.3 FRUIT FIRMNESS CHANGE

A change in fruit firmness is a biological change, which occurs during the ripening of fruit. The change is due to conversion of the insoluble parent form of protein (protopectin) into soluble pectin (Wills et al, 1981). This causes a change of the cell wall structure, resulting in a more loosely bound structure and softer tissues. As a result of continued chemical activity within the fruit tissues even after harvest, it eventually becomes over ripe and softer. Since this change is as a result of the ripening process, any factor that can slow down the ripening process can therefore slow down the fruit firmness change. This can be achieved by storing at low temperature and high humidity.

2.5 PRINCIPLE OF EVAPORATIVE COOLING

The principle underlying Evaporative Cooling is the conversion of sensible heat to latent heat. The warm and dry outdoor air is forced through wetted pads that are replenished with water from the cooler's reservoir. Due to the low humidity of the incoming air some of the water evaporated, some of the sensible heat of the air is transferred to the water and becomes latent heat by evaporating some of the water. The latent heat follows the water vapour and diffuses into the air (Watt, 1986).

When water evaporates from a surface that surface becomes cooler because heat of vaporization is required to change the water from liquid to vapor. Evaporative cooling is a process in which the sensible heat in the air is used to evaporate water in contact with the air. The dry-

bulb temperature is reduced while the humidity of the air is increased. The process is considered adiabatic (no heat gained or lost) because sensible heat is convert to latent heat in the added vapor.

2.5.1 EVAPORATIVE COOLING AND PSYCHOMETRIC

Psychometric chart is used to analyze the effect of changing air conditions in evaporative cooling systems. Psychometric is a term generally used to describe the properties and behavior of moist air under various conditions. The subject of psychometrics involves determination of thermodynamic properties of air vapor mixtures. The most common applications are associated with the air-water vapor system. Evaporative cooling follows the process of cooling and humidification which is a psychometric process.

Evaporation results in cooling of the air or other substances. As the rate of evaporation increases, so does the rate of cooling. Evaporative cooling results in reduction in temperature and increase in relative humidity.

There are four major factors that influence the rate of evaporation and these factors usually interact with each other to influence the rate and extent of evaporative cooling. The factors are

2.5.2.1 Relative Humidity of the Air

This is the measurement of the amount of water vapor in the air as a percentage of the maximum quantity that the air is capable of holding at a specific temperature. When the relative humidity of the air is low, this means that only a small proportion of the total quantity of water which the air is capable of holding is being held. Under these conditions, the air is capable of taking additional moisture; hence the

rate of evaporation will be higher, and thus the efficiency of evaporative cooling system is expected to be higher.

2.5.2.2 Air Temperature

Evaporation occurs when water absorbs sufficient energy to change from liquid to gas. Air with relatively high temperature will be able to stimulate the evaporative process and also be capable of holding a great quantity of water vapor. Therefore, areas with high temperature will have high rate of evaporation and more cooling will occur. With lower air temperature less water vapour can be held and less evaporation and cooling with take place.

2.5.2.3 Air movement (velocity)

Air movement either natural (wind) or artificial (fan) is an important factor that influences the rate of evaporation. As water evaporates from a wet surface it raises the humidity of the air that is closest to water surface. If this humid air remains in place the rate of evaporation will start to slow down as humidity rises. Therefore this humid air near the surface must constantly be replaced with dryer air to maintain or increase the rate of evaporation, thus cooling.

2.5.2.4 Surface area exposed to air

The area of the evaporating surface is another factor that affects the rate of evaporation. The greater the surface area from which water evaporates, the greater the rate of evaporation.

2.6 METHOD OF EVAPORATIVE COOLING

There are two general method of achieving evaporative cooling.

2.6.1 Direct evaporative cooling

This involves the movement of air through the moist medium where evaporation and cooling occurs. This cool and moist air is then allowed to move directly to where it is needed.

2.6.2 Indirect evaporative cooling

This method of evaporative cooling uses some forms of heat exchanger that uses the cool, moist air produced through direct method, to lower the temperature of a drier air. This cool dry air is then used to cool the environment while the cool moist air is expelled.

In their fresh form fruits and vegetables are highly perishable after harvest, they tend to shrivel, wither or rot away at very fast rate. The storage of vegetable crop is one which requires high relative humidity and low air temperature. It then follows that the method of evaporative cooling is more appropriate for storage of vegetables and fruits.

Additional factor that affect the efficiency of direct evaporative cooling systems are

i) pad/cell designers

ii) Type of fibrous material use for the pad

iii) Surface wetting effectiveness within the pad

iv) Pad thickness

2.7: COOLING PAD MATERIALS

In evaporating water from the pad, there is a simultaneous heat and mass transfer. Heat is transferred from air to the pad for the evaporation of water, while water is given off from the pad to the air. This decreases the temperature of the ambient and at the same time increases the humidity ratio of the air. The rate of evaporation of water from this pad is a function of six parameters: the air relative humidity, temperature, porosity, thickness and surface area of the wet medium, water flow rate and the air velocity. The amount of water that the air can evaporate from the pad depends on the degree of saturation and temperature of the air. At any given temperature the air is able to take up and absorb more moisture from the pad at lower saturation. Therefore, the lower the relative humidity of the air, the higher the rate of evaporation and thus more cooling takes place. (Dzivama, 2000)

It is heat from the air that is used to heat and evaporate the water from the pad. Therefore air at higher temperature will have higher capacity to stimulate evaporation. For evaporation to take place movement of air is required. In addition after the evaporation, the saturated air must be removed away from the pad to allow for incoming unsaturated air. However, air moving at high velocity may draw out water from the pad without evaporating, i.e. in droplet form. Also high air speed reduces the residence time available to any sample of air within the pad to effect evaporation (wiersma, 1983 and FAO/SIDA, 1986).

2.8: FORMS OF DIRECT EVAPORATIVE COOLING SYSTEM

There are two forms in which the evaporative cooling can be applied. The difference is based on the means of providing the air movement across or through the moist materials.

These are the passive and non-passive forms. The passive form of evaporative cooling relies upon the natural wind velocity to provide the means of air movement through the moist surface to effect evaporation. The non-passive (active) use the fan to provide the air movement through the moist surface to effect evaporation.

2.8.1 Passive- direct evaporative cooling system

The main components of this system include:

i) The cabinet were the product is stored

ii) The absorbent material, used to expose water to moving air

iii) An overhead water tank through which the water seeps down to and wet the absorbent material.

The first type of this form, designed and constructed by Afolayan (1985) and Rusten (1985) among others have the same layout but differs in materials used in construction. This cooler is a cabinet covered with a variety of absorbent materials. The cabinet is constructed with material ranging from bamboo to timber. The absorbent material covering the cabinet absorbs water from a tank on top of the cabinet. Evaporation occurs as the air moves past the soaked absorbent material. As long as evaporation takes place, the contents of the cabinet will be kept at temperature lower than that of the environment. The temperature reduction obtained in this type of cooler ranged from 5 to 10^0c. Another type of this form of evaporative cooling system was first made in India (Rustain, 1985).

The major disadvantage of this form of cooler is that under certain conditions it may be unable to maintain low temperature. For example, if the air is very dry and the wind very brisk, the drying action may exceed the absorbing action of the absorbent material, thus preventing it from staying moist. Again, when there is little or no wind, or when the humidity is high, the temperature in the cooler may not be much less than the environment.

2.8.2. Non-passive (active) direct evaporative cooling system

This system uses electricity to power a small fan and in some cases a small water pump. Essentially it consists of the cabinet where the produce is stored, pad (absorbent) which exposes the water for evaporation, and allows cooling to occur. Fan to draw air into the cabinet through the pad and water tank/pump to circulate the water and keep the pad continuously wet. This form of evaporative cooler commonly referred to as the fan and pad system, has been successfully applied in the cooling of greenhouse and animal environment (FAO,1981).Work done on this system also has shown a great potential towards its application to extend the shelf life of fruits and vegetables. Alhadi (1985), Johnson (1986) and Takura (1987) among others have designed and constructed this form of evaporative cooler for the storage of fruits and vegetables.

2.9 THERMODYNAMICS OF HEAT AND MASS TRANSFER DURING EVAPORATIVE COOLING

As agriculture and agricultural technology develops, investigators and practicing farmers have discovered that the control of the thermal environment contributes to the production and preservation of food crops. An important function of many agricultural buildings (e.g. dwellings, livestock structures, crop storage and greenhouse) is to provide an environment of controlled temperature and humidity. Therefore design of such structures requires understanding of the generation and transfer of heat and mass (air and moisture) (Barre et al, 1988).

2.9.1 Heat and mass transfer

Heat transfer is a very important phenomenon in the design and construction of functional storage system. The storage of crops require the temperature of the environmental air be controlled to the storage temperature for the particular crop. As such, there must be a balance between the sources of heat input and output in storage, if a constant inside temperature is to be maintained (Esmay and Dixon, 1986).

Sanni, (1999) reported that environmental factor such as climate, wind, radiation etc must be considered in design of closed system. Materials of construction as well as the types and properties of crops to be stored are also crucial to the development of efficient storage system.

When water and non-saturated air-water mixture are in free contact but are thermally isolated from other influences, heat and water transfer occurs between them as a function of the differences between their respective temperatures and vapour pressure. Heat flows from the warmer to the cooler (heat transfer) and water vapour flows away from higher vapour pressure towards lower, a process termed “mass transfer”.

It usually consists of simple evaporation from the water surface, with the water vapour mixing into air. However, the opposite also occurs; water vapour in the air condenses upon any exposed water surface having a temperature corresponding to a lower vapour pressure. Given adequate time, temperature and vapour pressure equalize, ending further net flow.

There are major modes by which heat is transferred from one place to another; these are conduction, convention and radiation. More emphasis is however put on conduction mode for design purposes. A property known as surface conductance (f) combines the effects of radiation, convention and conduction. As such, once the value of f for a particular surface is known, little emphasis can be paid to effects of radiation and conduction.

2.9.2. Dynamics of heat conduction

The rate at which heat is conducted through a substance is given by Fourier equation.(Igbeka et al, 2009).

$q = -kA\ dt/dx$ ----------2.2

$q = heat\ flow\ rate\ in\ one\ direction\ in\ watts$

$k = thermal\ condutivity\ \left(W.\frac{m}{m^2}.k\right)$

A = cross-sectional area normal to direction of flow (m^2)

$dt/dx = temperature\ gradient\ \left(\frac{K}{m}\right)$

Fourier's equation shows that the rate of heat conduction is directly proportional to the cross sectional area, the temperature gradient and the thermal conductivity of the substance. The minus sign indicate that the temperature gradient is negative, with the heat flow in the direction of decreasing temperature.

2.9.2.1: HEAT FLOW THROUGH WALLS

In practices, walls ceiling and roofs enclosing a building space are rarely homogenous. Usually each consists of a combination of different materials. Consequently, the practical problem is one of the determining the heat transfer through such building components taking into consideration air spaces and surface conductance (Barre et al, 1988).

The rate of heat transmission through building materials depends on the characteristics of the material-its density, the size and arrangement of its particles or fibers, moisture content, temperature and surface characteristics. The principal terminologies usually encountered in heat transfer through wall are defined thus:

1. Conductivity (k) of homogenous materials

The thermal conductivity, k as contained in the Fourier equation is the time rate of heat flow normal to a unit area in a homogenous material for a unit change in temperature. For design purpose, the k value of a specific building material should be known.

2. Conductance (C) in non-homogenous walls

A non-homogenous (heterogeneous) wall is one in which two or more different materials (each having different k values) are brought

together to form a composite wall. When analyzing heat flow across heterogeneous walls, a great deal of simplification is required for computation purposes. However, another important parameter closely related to the thermal conductivity k is thermal conductance. This is the time rate of heat flow expressed in W/m^2 .k, and it gives the heat flow for the entire thickness of a material instead of per unit length as is the case with conductivity. Therefore for a homogeneous material of thickness L,

$C = K/L$ ----------2.3

The reciprocal of conductance is termed thermal resistance

R, given by:

$R = L/K$ ----------2.4

3. Surface conductance, *f*

Heat transmission from a surface is the combined process of radiation, conduction and convection, the rate of heat flow is affected by the temperature and emissivity of the surface, the air velocity, and temperature difference between the surface and the air. The surface conductance ***f*** combines the effects of radiation, convection and conduction in unit of W/m^2.k for a unit temperature difference between the surface and air. The value for a particular surface depends on air velocity, the orientation of the surface with respect to direction of heat flow. It also increases with the emissivity ϵ of the surface.

4. Overall heat transmission coefficient, U

To determine the heat flow through a wall of different materials, air spaces and surfaces, it is necessary to calculate its overall heat transmission coefficient $\boldsymbol{U}$ or the overall thermal $R = \frac{I}{U}$. The heat flow consist of four phases: It flows from the inside air to wall surface, through two materials of thickness L_1, and L_2, and from the wall surface to outside air. If $\boldsymbol{U}$ is the overall heat transmission coefficient, the Fourier equation for a steady-state condition can be applied to the wall.

$$Q = UA\,(t_1 - t_0) = A/R(t_1 t_0)$$ ----------2.5

Where

$$U = (\frac{1}{f1} + \frac{L1}{k1} + \frac{L2}{k2} + 1/fo)^{-1}$$ ----------2.6

And

$$R = 1/U = (1/f1 + L1/k1 + L2/k2 + 1/f0)$$ ----------2.7

Where

f_1= surface conductance for inside surface ($W/m^2.k$)

f_2= surface conductance for outside surface ($W/m^2.k$)

k_1, K_2= thermal conductance of the two material respectively (W/m. k)

U value of n number of material can thus be written as:

$$U = (\frac{1}{f_1} + \sum Lx/Kx + \frac{1}{fo})^{-1}$$ ----------2.8

And corresponding thermal resistance (R) is given by:

R= 1/u = $(\frac{1}{F_1} + \sum \frac{Lx}{Kx} + 1/f_o)$ ----------2.9

2.9.3 VAPOR TRANSMISSION THROUGH MATERIALS

Water vapor transmission through materials is governed by physical principles similar to those for heat transmission. The driving force for vapor flow is the vapor pressure difference. Water vapor transmission is based on Fick's law expressed as:

W/A θ $= -\mu\, dp/dx$.....2.10. (Igbeka et al, 2009

Where,

W=weight of water vapor transmitted (g)

A= area (m^2)

θ = time (hrs.)

x= distance along path (m)

p = vapour pressure

μ = Permeability ($g.m/m^2.hr.KPa$)

Fick's equation may be integrated from x = 0 to L and from P_1 to P_2 to give

W=$\mu\, A\, \theta\, (\frac{\Delta P}{L})$ ----------2.10

W= total weight of vapor transmitted (g)

A= area of cross –section of flow path (m^2)

θ = Time of transmission (hr)

ΔP = partial pressure difference between ends of flow path (KPa)L=length of path or thickness of material (m)μ = average permeability of material ($g.m/m^2.hr.KPa$).

2.9.4 HEAT AND MASS BALANCE FOR THE PAD-END

The heat and mass balance can be derived as follows:

1. Heat balance for the pad-end

   The mass of air passing through the pad of volume P_A P_T at any time dt is equal to:

$$M_a = (P_a V_a + P_a V_a W_o) P_A P_T P p dt \text{ ----------2.11}$$

   Where

   M_a = mass of moist air, kg

   P_p= porosity of the pad, in decimal

   P_a=density of the air, kg/m_3

   P_T = pad thickness

   V_a=velocity of air, m/s

   W_o=humidity ratio of the air, kg of water/kg of dry air.

P_A = Effective pad surface cooling area, m^2, approximated by the effective evaporator surface area expressed as:

$P_A = A_T \times P_E$ (Earle, 1983).

A_T= Total pad surface area, m_2

P_E= pad material efficiency approximated to fin efficiency as in evaporator and considered as the porosity of the pad P_P

dt= time,(sec), it takes the air to pass through the pad of thickness P_T, expressed as P_T/V_A.

The enthalpy of the air flowing through the pad at any time dt is equal to:

$h_a = (P_a V_a C_a + P_a V_a W_o C_v)\ T_o\ P_A P_P P_T / V_A$ ----------2.12

Where:

h_a = enthalpy of the moist air, kJ/kg

T_o = outside air temperature, ^oC

C_a = specific heat capacity of the air, kJ/ kg ^oC

C_v = specific heat capacity of water vapour, kJ/ kg ^oC

The change in the enthalpy of the air as it passes through the pad thickness due to the void spaces or porosity of the pad in time dt, is equal to: $h_c = (P_a V_a C_a + P_a V_a W_o C_v)\ x(\ dT/dP_T)\ x(\ P_A P_P P_T / V_A)$ …….2.13

Where,

h_c= change in enthalpy of the air with respect to the change in pad thickness, dT/dP_T = change in the temperature of the air after passing through the pad of thickness dP_T.

The change in the enthalpy of the air per unit pad thickness is due to the convective heat transfer from the air to the pad, required for the evaporation of the water from the pad.

This can be represented by the newton's law of cooling in time dt, as:

$$q=h^1 (T_o-T_p)P_p P_A P_T/V_A \text{ ----------2.14}$$

Where:

q= rate of heat transfer from the air to the pad, kJ/s

h^1= convective heat transfer coefficient, $w/m^2\,^0C$ ($kJ/m^2\,^0C$)

T_P= temperature of the air after passing through the pad, ^0c.

This change in the sensible heat is equal to the change in the enthalpy of the air after passing through the pad, therefore equating 2.15 and 2.16 we have;

$dT/dP_T = h^I (T_o-T_P)/(P_a V_a C_a+P_a V_a W_o C_v)$ ----------2.15

2. Mass balance for the pad-end.

The mass transfer from the pad of a unit thickness, m, to the air is due to the concentration difference or partial vapor pressure difference between the free air stream and the boundary layer of the pad. The rate of evaporation could be expressed as;

$M_T=h_D P_a V_a (H_P-H_o)P_A P_p P_T/V_A=(h_D P_a V_a M_w)/(R_o T_{abs})x(P_{vs}-P_{va})P_A P_P P_T/V_A$-----2.16

Where;

M_T= mass of water evaporated by the air from the pad, kg/s.

h_D= mass transfer coefficient, m/s.

H_o=concentration of water vapor in the outside free air stream, kg/m^3

H_p= concentration of water vapor in the boundary layer of the pad, kg/m^3

P_{vs}= saturation vapor pressure at the wet-bulb temperature, kg/m^2

p_{va} = partial vapour pressure of the water vapour in the unsaturated air stream, kg/m^2

M_w =molecular weight of water.

R_o = universal gas constant, 8315KJ/kg ^{o}k mole.

T_{abs} =absolute temperature, calculated as the average temperature, between the dry bulb and wet-bulb temperature, ^{o}k.

The heat required to evaporate the water from the pad in dt is equal to;

$$\mathbf{Q= M_T h_{fg}=(h_{fg}h_D M_W P_a V_a)/(R_o T_{abs})x\ (P_{vs}-P_{va})\ P_A P_p\ P_T\ /V_A \ldots\ldots 2.17}$$

Where;

Q= heat required to evaporate the water from the pad, kJ

h_{fg}= heat of vaporization, kJ/kg,

At equilibrium, the total change in the enthalpy of the air is equal to the heat required for the evaporation of the water from the pad, thus equating the equation 2.17 and 2.19 as;

$$\mathbf{h^1(T_o-T_p)/(P_a V_a C_a+P_a V_a W_o C_v)=(h_{fg}h_D M_w P_a V_a)/(T_{abs})x(P_{vs}-P_{va})P_A P_P P_T/V_A} \quad \text{---} \quad \mathbf{2.18}$$

The relative humidity of the air after passing through the pad could be predicted, by representing the evaporative cooling process on the psychometric chart; after calculating the temperature T_p. The air at

T_o, after passing through the pad, is cooled adiabatically and it follows along the constant wet bulb temperature line on the psychometric chart. Where the T_p, calculated using equation 2.18 intersects with the constant wet-bulb line, the relative humidity Φ% of the air leaving the pad can be read directly on the psychometric chart.

2.9.5. HEAT LOAD OF THE EVAPORATIVE COOLER

The cooled and humidified air from the absorbent material is required to remove the heat load of the evaporative cooler for the storage of fruits and vegetables. The following are source of heat load on the cooler

2.9.5.1: HEAT GAINED BY CONDUCTION THROUGH THE WALLS, ROOF AND FLOOR OF THE COOLER..

The heat transfer by conduction into the store was calculated by multiplying the area of the various components of the cooler such as walls, floor and roof by their appropriate conductivity value, reciprocal of insulating thickness and by the difference between the outside temperatures. The total was obtained by the addition of these various products.

$$Q = \frac{KA\ dT}{dt} \quad \text{.....2.19. (Igbeka et al, 2009)}$$

Where,

Q = heat transfer by conduction, W

A = total area of the various components, m^2

dT = difference between outside and inside temperature, ^{0}C

dt = insulation thickness.

2.9.5.2 RESPIRATORY HEAT LOAD OF THE PRODUCT

The heat of respiration is the energy released by the products as it respires. The heat decreases during the initial cooling of produce and stabilizes after the required storage temperature is achieved.

Respiration heat can be expressed as:

$$Q_r = M_p \times P_r \ldots\ldots\ldots\ldots\ldots\ldots 2.20.$$ (Igbeka et al, 2009)

Where:

Q_r = respiration heat, W/hr

M_p = mass of produce, kg

P_r = rate of respiration heat production W/kg hr,

2.9.5.3: FIELD HEAT OF THE PRODUCE,

This is the heat picked up by the produce on the field. It is directly proportional to mass of the produce and the storage temperature. This is expresses as:

$$Q_r = (M_p C_p)\Delta T/t_c \ldots\ldots\ldots\ldots\ldots\ldots 2.21.$$ (Igbeka et al, 2009)

Where

Q_r =field heat picked up by produce, w

C_p = specific heat capacity of produce, KJ/kg^{0}C

t_c = cooling time in seconds.

2.9.5.4 INFILTRATION OF AIR

This is heat transfer through cracks and door opening during cooling

This heat is estimated to be from 10 to 20% of the total heat load from the other sources.

Thus, taking an average of 15%, we have;

$Q_L = (Q_c + Q_r + Q) \times 0.15$……2.22. (Igbeka et al, 2009)

Where,

Q_L = heat transfer through cracks and opening of cooler door.

CHAPTER THREE

MATERIALS AND METHODS

3.0 DESIGNCONCEPT

Figure 3.1 shows the isometric view of the evaporative cooling system, while Figure 3.2 shows the orthographic views. The sectional view is shown in Figure 3.4, while Figure 3.5 shows the exploded views.

3.1 DESCRIPTION

An evaporative cooling system for the preservation of fresh vegetables was developed for extending the shelf life of Fruits and Vegetables and its performance was evaluated. It consists basically, the storage chamber, cooling fan and the transmitting medium (cooling pad). The cooling chamber consist of a cuboid shaped with total storage space of 0.036m3, made of galvanized metal sheet, and internallyinsulated with 0.05 m polystyrene foam, 10 D.C. fans of 0.04 m^3/min air flow rate, cooling pad (Jute) of 0.12m thickness. A water reservoir of capacity 0.036m^3 is linked to the cooling system at the through a P.V.C. pipe supplying water to keep the cooling pad continuously wet.The specifications as indicated in Figure 3.1 and 3.2 are as were obtained in the detailed design shown in appendix G.

3.2 PRINCIPLE OF OPERATION

The basic principle relies on cooling by evaporation, when the system is set in operation, the dry air from the fans passes over the wet surface (cooling pad) and evaporated the soaked water away from the cooling pad. When water evaporates, it draws energy from its surroundings (storage chamber) which produce considerable cooling effect in the storage chamber.

In operation, water from the overhead tank enters the perforated pipe laid over the absorbent material and drips through the pad material, thus wetting the material. The excess water dripping out is collected on

the collective trough from where it is manually re-circulated into the overhead tank. The rate of the water flow can be regulated with the valve at the base of the overhead tank.

The fans positioned in front of the pad material forces ambient air through the wetted material. The ambient air on passing through the wet pad uses some of its sensible heat energy for vaporization of water, thus lowering its temperature while at the same time serving as the medium for carrying the vapor, hence increasing its humidity. This high humid, low temperature air is allowed to enter the storage cabin through the FOUR (4) perforated P.V.C. pipes. The movement of this high humid, low temperature air into the storage cabin is facilitated by the suction fan at the base of the storage cabin which creates negative pressure inside the storage cabin.

3.4 MATERIAL OF CONSTRUCTION

All materials for this construction were locally available. The evaporative cooler in this study consists of :

a) The absorbent material (jute bag)
b) D.C fans
c) Plastic container
d) P V C pipes
e) Galvanized metal sheet, 2”x2”galverni

3.4.1 FEATURES OF THE COOLER

3.4.1.1 Absorbent Material (the jute bag)

The choice of this material for the pad was based on the following

a) Porosity of the material
b) Water absorption / evaporation rate of the material
c) Availability

A good pad material should be porous enough to allow flow of air through the pad for the evaporation of water. It should also be able to absorb and release water on wetting and evaporation respectively. The material should be locally available at relatively cheap cost and easily structured into the required shapes and sizes.

As part of the general requirements, the efficiency of an active evaporative cooler depends on the rate and amount of evaporation of water from the cooling pad. This is dependent upon the air velocity through the fan, pad thickness and the degree of saturation of the pad, which is a function of the water flow rate wetting the cooling pad Wiersma, (1983). In thiswork, Jute type of cooling pad of 0.12m thickness was selected for an efficient performance of the evaporative cooling system as it has good water holding capacity, high moisture content, % dry basis, high bulk density reported (Manuwa, 1991). Similar findings have been reported by Igbeka and Olurin (2009).

Jute bag materials are produced from natural fiber. It is already woven into a network with pore spaces between the strings. Jute bag being heavy, are usually used for packaging foodstuff. Old one is cheaper and much more porous and hence a good pad material than a new one.

3.4.1.2: WATER DISTRIBUTION

The water distribution system consists of the collecting trough, the perforated pipe, the hose and the overhead tank. The components are positioned to circulate the water by gravity. The overhead tank was connected to the perforated pipe laid on top of the pad. The horizontal

pipe was perforated with a 1mm diameter hole through which the water drips onto the pad. The excess water which passes down the pad when collected at the collecting trough was re-circulated manually with a small bowl with which the water is transferred back to the overhead tank.

3.4.1.3: STORAGE CABIN

The storage cabin consists of 540mm x 330mm x 200mm plastic container inserted inside a chamber of 770mm x 450mm x 410mmmade from a galvanized metal sheet. The inside of the chamber was lined with a 40mm thick polystyrene material to act as an insulator. This is to reduce heat interaction from the ambient environment. At the base of the storage cabin is mounted a D.C fan to create negative pressure inside the storage chamber.

3.4.1.4: FAN POSITION AT THE BASE OF THE STORAGE CABIN

The fan and pad arrangement of the evaporative cooling system relies on positioning the D.C. fan at the base of the storage chamber to create a negative pressure below that of the atmospheric inside the storage cabin and the suction fans in front of the absorbent material to force atmospheric air through the pad material. To ensure that the cool and humid air is uniformly circulated within the storage cabin, the air from the evaporative chamber has to enter the storage cabin through four (4) P.V.C .perforated pipes equally positioned at the inside-top of

the storage cabin. The exploded view of the Evaporative Cooling System is shown in figures 3.5.

3.5 EXPERIMENTAL METHODS AND PROCEDURE

The experiment was done in two phase. First phase is the no-load test which involves the comparison of the storage condition inside the chamber with the ambient condition of air, while the second phase dealt with the assessment of the storage effectiveness of the system used to store selected fruits and vegetables.

3.5.1 NO LOAD TEST OF THE EVAPORATIVE COOLER

This phase is aimed at observing the air condition inside the evaporative cooling system and that of the atmosphere simultaneously. The comparison is to note if there is any significant difference between them. Two parameters of interest are temperature and relative humidity.

3.5.1.1: TEMPERATURE AND RELATIVE HUMIDITY MEASUREMENT

The temperature changes in and around the cooler was measured and recorded hourly. Sensitive mercury-in-glass thermometers and hygrometer were used. The mercury-in-glass thermometers measures dry-bulb temperatures only while the hygrometers are used to measure both dry-bulb and wet-bulb temperatures.

From the dry-bulb and wet-bulb temperatures that were observed with the hygrometers, wet-bulb depressions were determined and the

corresponding relative humidity were read from the hygrometer. The performance of the system will be based on the cooling efficiency.The saturated efficiency (SE) of the cooler will be calculated as expressed in equation 3.1(Igbeka et al, 2009)

$$SE = \frac{T_1(db) - T_2(db)}{T_1(db) - T_1(wb)} \quad \ldots\ldots\ldots\ldots\ldots\ldots\ldots\ldots\ldots\ldots 3.1$$

Where,

$T_1(db)$ = dry-bulb outdoor temperature, ^oC

$T_2(db)$ = dry-bulb cooler temperature, ^oC $T_1(wb)$ = wet-bulb outdoor temperature, ^oC

3.5.1.2 DETERMINATION OF AIR DISTRIBUTION INSIDE THE STORAGE CABIN

This experiment is aimed at studying the air conditions at different positions inside the storage cabin and comparing them to find out if there is any significant different between the conditions in the various positions.

Five (5) sensitive mercury air-glass thermometers were used and they are placed in both horizontal and vertical order. Three (3) of the thermometer were place at the same height (300mm) from the fan at the base of the storage carbin and 130mm from each other to take the reading across the horizontal plane while the remaining thermometer are placed along the vertical axis but at different heights of 170mm, and 430mm from the fan at the base of the storage cabin respectively as shown in figure 3.1

3.5.1.3 EXPERIMENTAL DETERMINATION OF THE EFFECT OF THICKNESS OF THE ABSORBENT MATERIAL ON THE EFFICIENCY OF THE SYSTEM

The experiment is aimed at determining the efficiency of the system with different pad thickness. Five (5) different pad thickness of 3mm, 6mm, 9mm, 12mm, and 15mm where used for the experiment. The pad material has a thickness of 1.5mm, and each unit was constructed by placing two ply of the absorbent materials on both side of a perforated 5mm thick plywood. This 5mm thick plywood serves dual function,

1) Holding the pad in position
2) Separating the pads to allow for easy air flow

Each pad thickness was used for the experiment and readings are taking hourly and the corresponding saturation efficiency was calculated. The experiment lasted for three (3) days for each pad thickness and the average efficiency was recorded.

3.5.2 LOAD TEST OF THE EVAPORATIVE COOLING SYSTEM

The performance efficiency of the cooler for the storage of the garden egg, carrots, pumpkin leaves and okra was evaluated. Some quality parameters for effective storage are used to assess the effect of the storage environment on the crops.

The samples were used for each quality assessment and the experiments were done in four replicates. Each replicate samples

represent a weight range. The samples for the control experiment have the same replication and weight range as that used inside the evaporative cooler.

The quality assessment tests carried out includes changes in

i) Physiological weight loss
ii) Colour changes
iii) Firmness change
iv) Crispiness change

3.5.2.1 PHYSIOLOGICAL WEIGHT LOST

The weight lost was measured using weighing balance. A number of each fruit and vegetable was chosen and marked for the weight assessment change. The samples were weighed before the start of the experiment and thereafter the weight was taken 3 times a day at 8am, I:00pm and 6:00pm until the end of the experiment. The percentage weight loss of the respective fruits and vegetables with time during the storage period was calculated.

3.5.2.2 COLOUR CHANGE

The colourchange of the respective fruits were observed during the cooling period. Assessment of colour change was done by comparing the colour of the produce against a numerical colour chart.

3.5.2.3FIRMNESSCHANGE

This test aims at determining the firmness of the fruits and vegetables at various stages during the storage period. The result serves as an index for determining how fresh the samples remain during the period of

storage. A compression machine was constructed and used for the firmness test. This machine makes use of a caliper to compress the specimen. In operation the specimen was placed between the arms of the caliper. Flat bar of uniform weight (100g) was loaded on it and the new thickness for various loads were recorded. Specimens having equal

weight were used for this experiment and the compression was performed at points having the same diameter.

3.5.3.4: CRISPINESSCHANGE.

The test was carried out by chewing some samples and comparing the hardness against a range of hardness having numerical values, starting from “very hard” to “very soft” corresponding to numerical values of 1 to 5. Different individual chew the sample specimens and comparison was based on human judgment.

PLATE 3.1 PICTORIAL VIEWS OF THE EVAPORATIVE COOLER

PLATE 3.2: FIRMNESS TESTING MACHINE

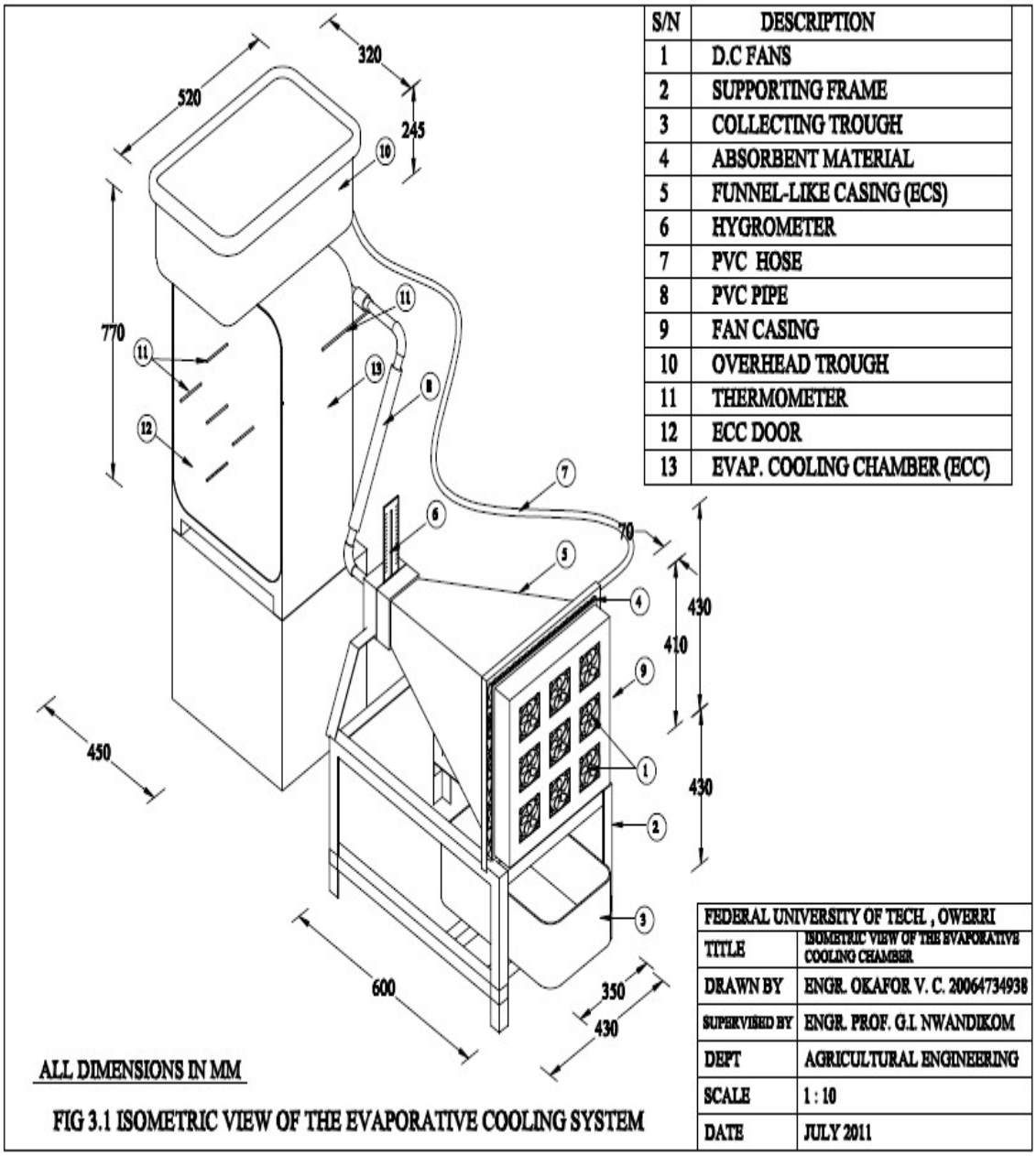

S/N	DESCRIPTION
1	D.C FANS
2	SUPPORTING FRAME
3	COLLECTING TROUGH
4	ABSORBENT MATERIAL
5	FUNNEL-LIKE CASING (ECS)
6	HYGROMETER
7	PVC HOSE
8	PVC PIPE
9	FAN CASING
10	OVERHEAD TROUGH
11	THERMOMETER
12	ECC DOOR
13	EVAP. COOLING CHAMBER (ECC)

FEDERAL UNIVERSITY OF TECH. , OWERRI	
TITLE	ISOMETRIC VIEW OF THE EVAPORATIVE COOLING CHAMBER
DRAWN BY	ENGR. OKAFOR V. C. 20064734938
SUPERVISED BY	ENGR. PROF. G.I. NWANDIKOM
DEPT	AGRICULTURAL ENGINEERING
SCALE	1 : 10
DATE	JULY 2011

FIG 3.1 ISOMETRIC VIEW OF THE EVAPORATIVE COOLING SYSTEM

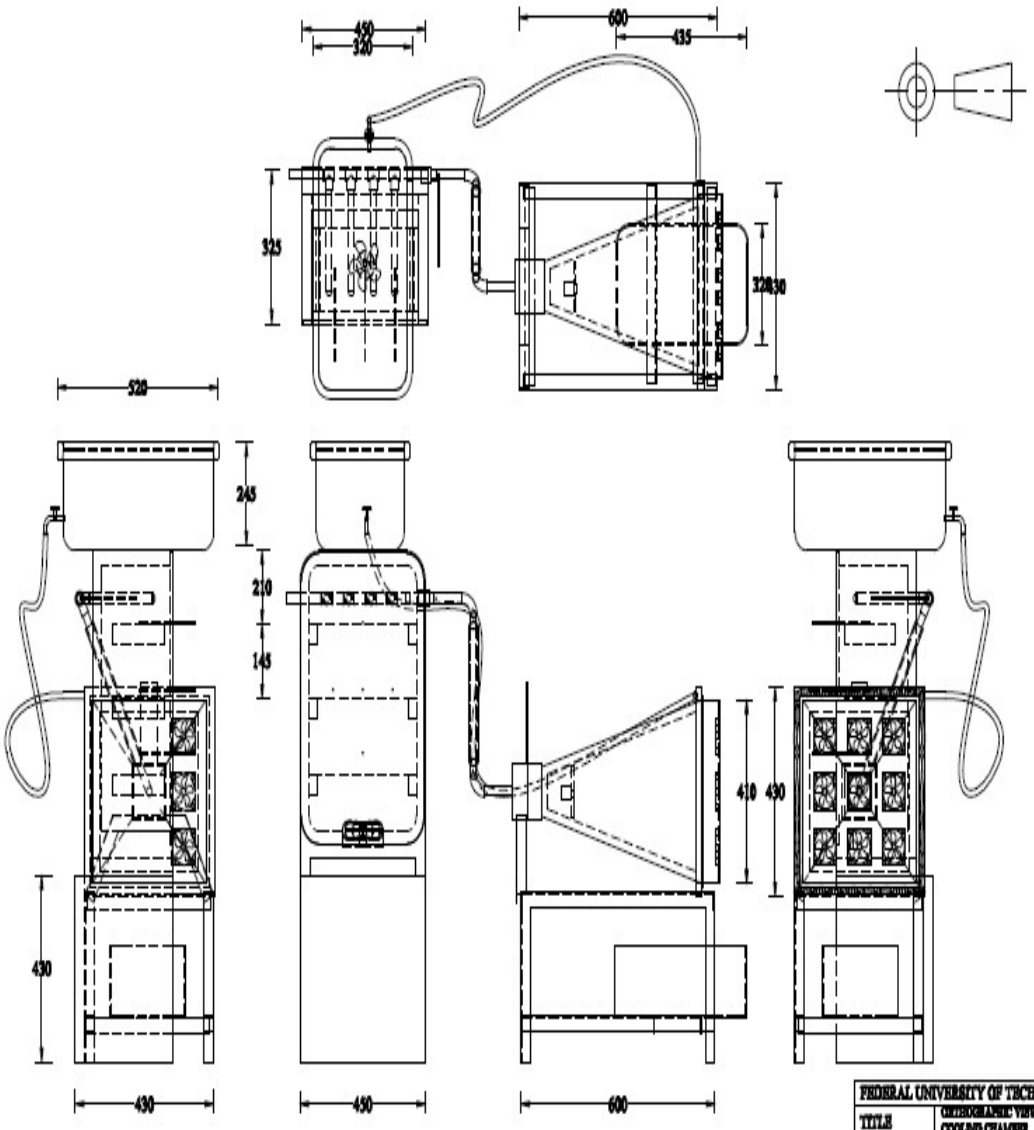

ALL DIMENSIONS IN MM

FIG 3.2 ORTHORAPHIC VIEW OF THE EVAPORATIVE COOLING SYSTEM

FEDERAL UNIVERSITY OF TECH. , OWERRI	
TITLE	ORTHOGRAPHIC VIEW OF THE EVAPORATIVE COOLING CHAMBER
DRAWN BY	ENGR. OKAFOR V. C. 2006/734938
SUPERVISED BY	ENGR. PROF. G.I. NWANDIKOM
DEPT	AGRICULTURAL ENGINEERING
SCALE	1 : 10
DATE	JULY 2011

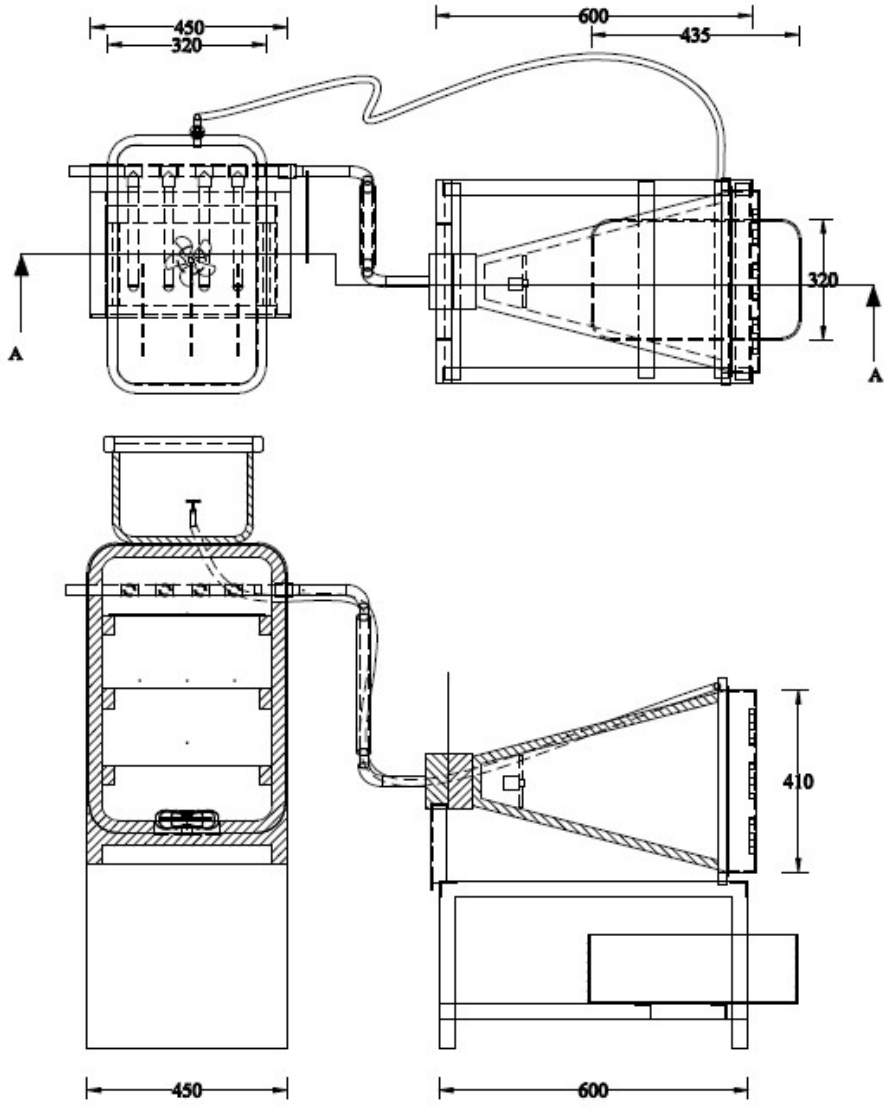

ALL DIMENSIONS IN MM

FEDERAL UNIVERSITY OF TECH. , OWERRI	
TITLE	SECTIONAL VIEW OF THE EVAPORATIVE COOLING CHAMBER
DRAWN BY	ENGR. OKAFOR V. C. 20064734938
SUPERVISED BY	ENGR. PROF. G.I. NWANDIKOM
DEPT	AGRICULTURAL ENGINEERING
SCALE	1 : 10
DATE	JULY 2011

FIG 3.4 SE CTIONAL VIEW OF THE EVAPORATIVE COOLING SYSTEM

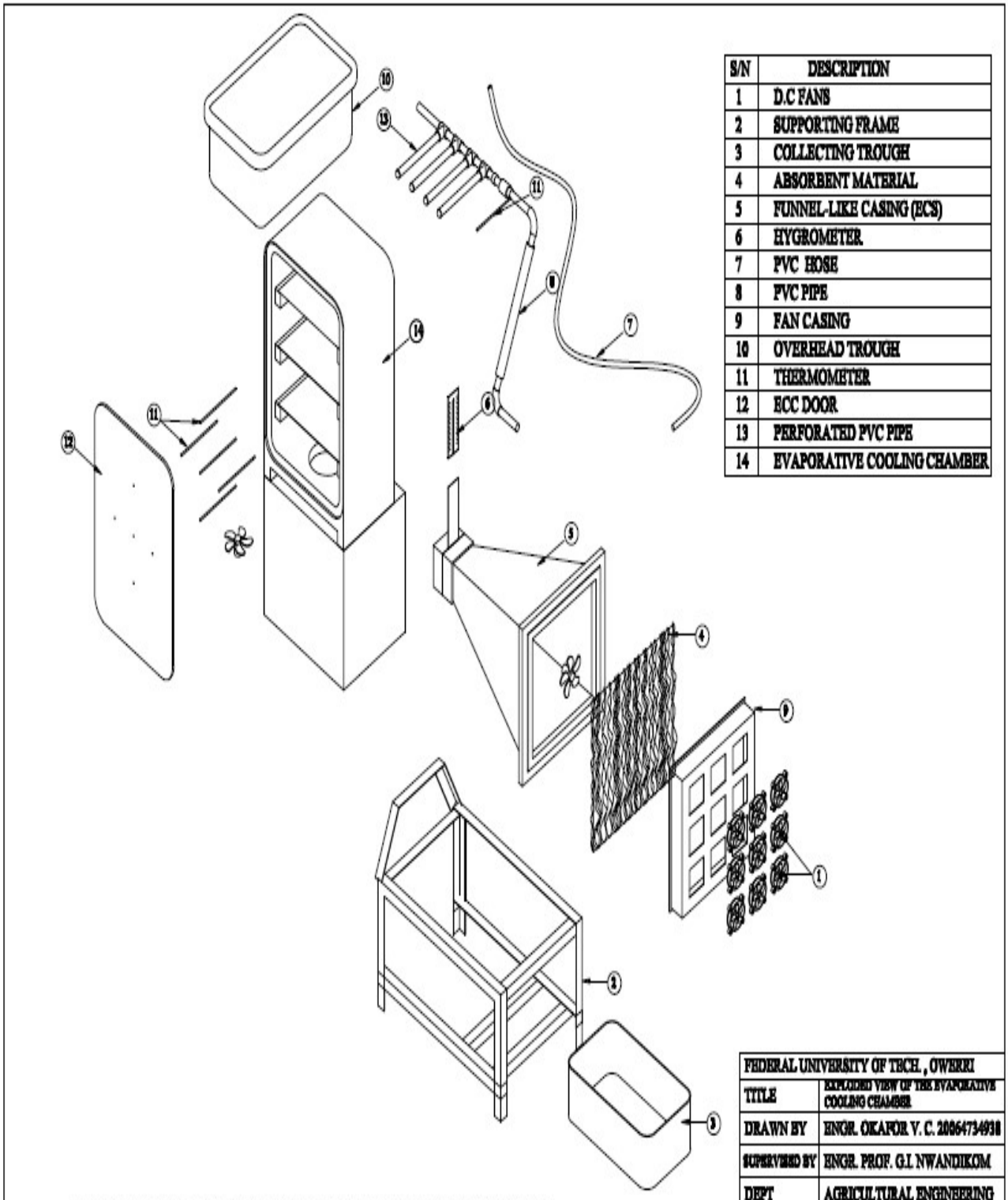

S/N	DESCRIPTION
1	D.C FANS
2	SUPPORTING FRAME
3	COLLECTING TROUGH
4	ABSORBENT MATERIAL
5	FUNNEL-LIKE CASING (ECS)
6	HYGROMETER
7	PVC HOSE
8	PVC PIPE
9	FAN CASING
10	OVERHEAD TROUGH
11	THERMOMETER
12	ECC DOOR
13	PERFORATED PVC PIPE
14	EVAPORATIVE COOLING CHAMBER

FEDERAL UNIVERSITY OF TECH., OWERRI	
TITLE	EXPLODED VIEW OF THE EVAPORATIVE COOLING CHAMBER
DRAWN BY	ENGR. OKAFOR V. C. 2006473493H
SUPERVISED BY	ENGR. PROF. G.I. NWANDIKOM
DEPT	AGRICULTURAL ENGINEERING
SCALE	1 : 10
DATE	JULY 2011

FIG 3.5 EXPLODED VIEW OF THE EVAPORATIVE COOLING SYSTEM

CHAPTER FOUR

RESULTS AND DISCUSSION

4.0 NO LOAD TEST OF THE EVAPORATIVE COOLING SYSTEM

4.1 Results of Temperature and Relative Humidity Readings of the Evaporative Cooling System (ECS) (without products)

The developed system was tested while empty in order to assess its performance. Two important parameters namely temperature and relative humidity were of interest. These were simultaneously recorded for both the ECS and ambient air. The daily readings of temperature and relative humidity of air measured inside the storage chamber without the products are presented in appendix A.

4.1.1 Temperature

The result of the temperature readings at various cooling period extracted from appendix A is as shown in table 4.1

It can be seen from the daily readings that ambient temperature is lowest early in the morning (8.00hrs) and increases gradually to a maximum at about 14hrs. Thereafter, it decreases gradually to a minimum which, however, is greater (in most cases) than the corresponding morning temperature.

Inside the cooler, the variation is similar to that of the ambient condition but the range is very much shorter than the later. This is due to the effectiveness of the cooler. The cooling chamber maintained a dry

bulb temperature below 25 ^{0}C all through the period while the ambient varied from 26 ^{0}C to 36 ^{0}C. This maintained a temperature decrease or reduction of about 30% at about 2.00 pm and relative humidity gain range of 200% to 300%

TABLE 4.1 TEMPERATURE AND RELATIVE HUMIDITY READINGS (WITHOUT PRODUCT)

TIME	AMBIENT CONDITION			COOLER CONDITION		
(HRS)	DB (^{0}C)	WB (^{0}C)	RH (%)	DB (^{0}C)	WB (^{0}C)	RH (%)
8.00	26.0	22.0	69.0	23.0	22.5	96.0
9.00	28.0	22.5	60.0	23.0	22.5	96.0
10.00	29.0	22.5	55.0	23.5	23.0	96.0
11.00	31.0	23.0	48.0	24.0	23.5	96.0
12.00	32.0	22.5	41.0	24.5	24.0	94.0
13.00	33.0	22.0	35.0	25.0	24.5	92.0
14.00	34.0	22.0	32.0	25.0	24.0	92.0
15.00	33.0	22.0	35.0	25.0	24.0	92.0
16.00	32.0	22.0	39.0	24.5	24.0	93.0
17.00	30.0	20.5	39.0	24.5	24.0	93.0
18.00	29.0	21.0	46.0	24.0	23.5	96.0

4.1.2: RELATIVE HUMIDITY

Generally, the relative humidity of the ambient condition decreases from a high value in the morning (8hrs) to a minimum value at about (14.00hrs) and thereafter increases. The marked increase in relative humidity of the evaporative cooling chamber over ambient values is an evidence of the absorbent material as potential cooling pad.

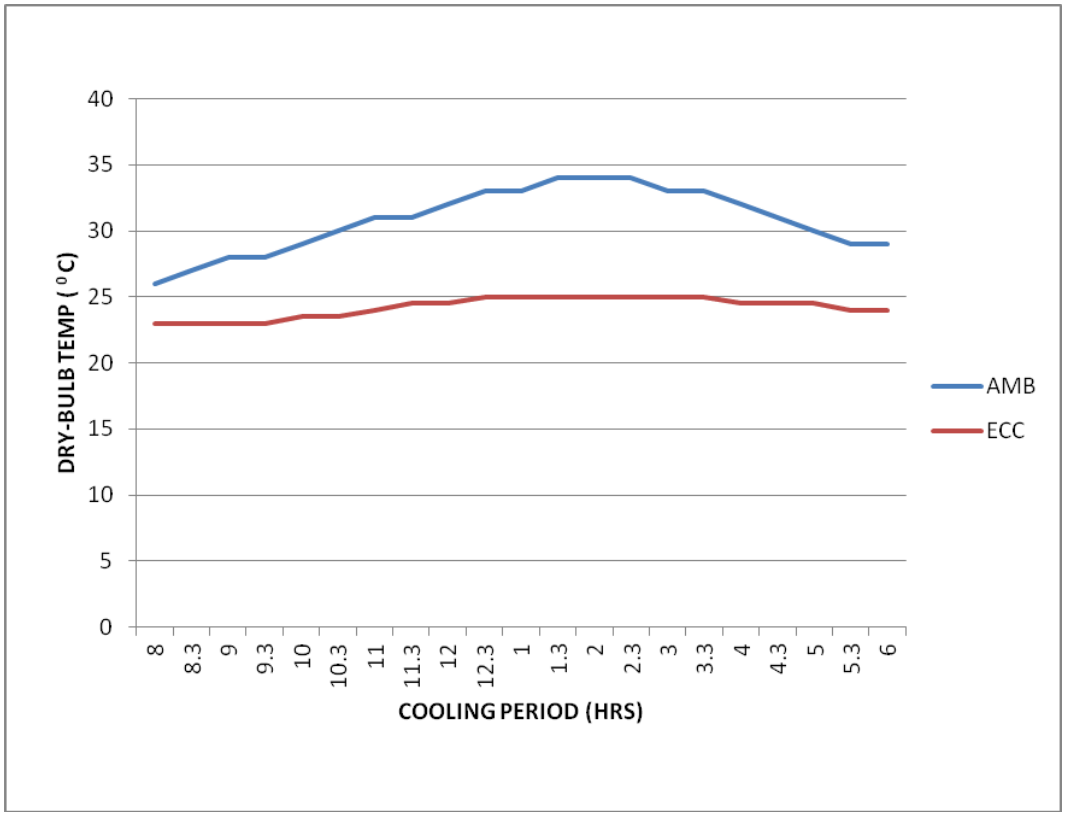

Figure 4.1: Dry bulbTemperature at the exit of cooling pad compared tdry bulb temperature of ambient (without product)

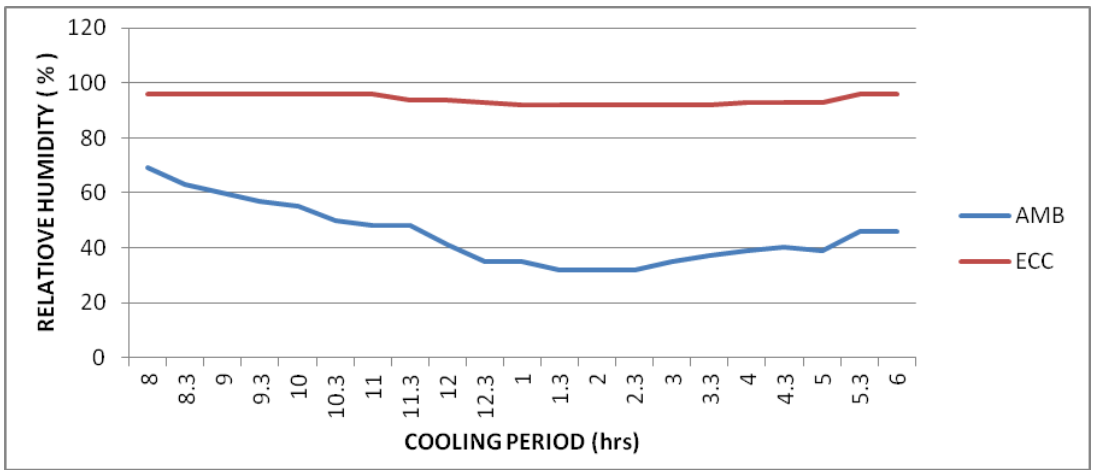

Fig4.2: Relative humidity of the cooling Pad compared to that of Ambient.

4.2: Result of Temperature Variation at different Locations inside the Evaporation Cooling Chamber Compared to the Ambient and Cooling Pad Temperatures

The experimental data for the temperature measurements across the horizontal and vertical cross-sections inside the EVAPORATION COOLING CHAMBER at five (5) different locations (A,B,C,D and E) compared to the dry bulb (db) temperature as extracted from Appendix A is shown in table 4.2.

The result of the ANOVA shows no significant difference among the various positions (A,B,C,D, and E) inside the evaporation cooling chamber for least significant difference (l.s.d) of 0.4883. This implies that temperature variations across the horizontal and vertical cross-sections inside the evaporative cooling chamber are statistically not significant. Hence, we can assume uniform temperature distribution inside the cooling

TABLE 4.2: TEMPERATURE VARIATION AT DIFFERENT LOCATION INSIDE THE EVAPORATIVE COOLING SYSTEM.

4.2.1 ANALYSIS OF VARIANCE

DAY ONE					
DRY-BULB TEMP. (^{0}C)					
LOCATION	A	B	C	D	E
TIME(hrs)					
8.00	23.5	23.5	23.0	23.5	23.5
9.00	23.5	23.5	23.5	23.5	24.0
10.00	24.0	24	23.5	24.0	24.0
11.00	24.5	24.0	24.0	24.5	24.5
12.00	25.0	24.5	24.5	25.0	25.0
13.00	25.5	25.5	25.5	25.0	25.5
14.00	25.5	25.5	26.0	25.5	26.0
15.00	25.5	25.5	25.0	25.5	25.5
16.00	25.5	26.0	25.0	25.0	25.0
17.00	25.0	25.5	25.0	25.0	25.0
18.00	24.5	24.5	24.5	24.5	25.0

DAY TWO					
DRY-BULB TEMP. (^{0}C)					
LOCATION	A	B	C	D	E
TIME(hrs					
8.00	22.0	21.5	22.0	22.0	21.5
9.00	22.5	22.0	22.0	22.5	22.0
10.00	23.0	22.5	22.5	23.0	23.0
11.00	23.0	23.0	22.5	23.0	23.0
12.00	23.5	24.0	23.0	23.5	23.5
13.00	24.0	24.5	23.5	24.0	24.0
14.00	24.5	24.5	24.0	24.0	24.5
15.00	24.0	24.5	24.5	24.0	24.5
16.00	24.0	24.0	24.5	24.5	24.0
17.00	23.5	23.5	24.0	24.0	23.5
18.00	23.0	23.0	23.5	23.5	23.0

(ANOVA) FOR TEMPERATURE VARIATION.

```
 Analysis of variance *****

Variate: TEMP

Source of variation     d.f.s.s.m.s.v.r.F pr.

 REP stratum                1    56.7364    56.7364   85.05
 *****
REP.*Units* stratum
POSITN                      4     0.0591     0.0148    0.02  0.999
Residual                  104    69.3773     0.6671
 Total                    109   126.1727

 ***** Tables of means *****
Variate: TEMP

Grand mean  24.055

 POSITN        A        B        C        D        E
           24.023   24.091   24.045   24.045   24.068
 *** Least significant differences of means (5% level) ***

Table               POSITN
rep.                    22
d.f.                   104
l.s.d.              0.4883
```

TABLE 4.3: EFFICIENCIES OF THE EVAPORATIVE COOLING SYSTEM WITHDIFFERENT PAD THICKNESS

THICKNESS	3mm				6mm				9mm			
TIME	DAY				DAY				DAY			
	1	2	3	AVG	1	2	3	AVG	1	2	3	AVG
8	68.8	72.2	68.8	69.9	70.6	75	70.6	72.1	77.6	76.5	75	76.4
9	64.7	70.6	70.6	68.6	70.6	70.6	72.2	71.1	76.5	77.8	81	78.4
10	63.2	70.6	72.2	68.7	70.6	72.2	75.7	72.8	72.2	75	81	76.1
11	70	66.7	70	68.9	72.2	70	73.7	72	70	82.4	78.9	77.1
12	75	70	65	70	75	70	75	73.3	75	75	80	76.7
13	71.4	69.6	71.4	70.8	73.9	75	75	74.6	72.7	78.3	81.8	77.6
14	72.7	70.8	72.7	72.1	70.8	72.7	76.9	73.5	81.8	75	75	77.3
15	70	70.8	70	70.3	70.8	72.7	78.3	73.9	77.3	75	75	75.8
16	68.2	71.4	70	69.9	71.4	70	77.3	72.9	75	81.8	77.3	78
17	70	70	72.7	70.9	70	75	72.7	72.6	70	85.7	77.3	77.7
18	70	70	70	70	73.7	73.7	72.7	73.4	73.7	80	80	77.9

THICKNESS	12mm				15mm			
TIME	DAY				DAY			
	1	2	3	AVG	1	2	3	AVG
8	88.9	81.3	83.3	84.5	75	87.5	83.3	81.9
9	83.3	82.4	78.9	81.5	83.5	87.5	77.8	82.9
10	80	85.7	80	81.9	85.7	77.8	77.8	80.4
11	83.3	75	90	82.8	75	83.3	84.2	80.9
12	80	84.2	89.5	84.6	77.8	90.5	81.8	83.4
13	88.9	85	81.8	85.2	80	90.9	81.8	84.2
14	80	86.4	91.7	86	80	91.7	85.7	85.8
15	76.2	86.4	86.4	83	80	90.9	80	83.6
16	80	85.7	80	81.9	77.8	90.5	83.3	83.9
17	84.2	84.2	77.8	82.1	88.9	88.5	77.8	85.1
18	83.3	77.8	82.4	81.2	83.3	88.9	83.3	83.3

4.3 Result of the Effect of Pad Thickness on the Efficiency of the System

The result of the DB, WB and RH of the EVAPORATIVE COOLING CHAMBER compared to that of the ambient using five (5) different pad thicknesses are presented in appendix B. The average daily efficiency of the system over the period of the experiment extracted from the Appendix B is as shown in table 4.3.

TABLE 4.4: AVERAGE EFFICIENCIES OF THE PAD THICKNESS.

PAD THICKNESS	3mm	6mm	9mm	12mm	15mm
TIME(HRS)	EFF.(%)	EFF.(%)	EFF.(%)	EFF.(%)	EFF.(%)
8.00	69.9	72.1	76.4	84.5	81.9
9.00	68.6	71.1	78.4	81.5	82.9
10.00	68.7	72.8	76.1	81.9	80.4
11.00	68.9	72.0	77.1	82.8	80.9
12.00	70.0	73.3	76.7	84.6	83.4
13.00	70.8	74.6	77.6	85.2	84.2
14.00	72.1	73.5	77.3	86.0	85.8
15.00	70.3	73.9	75.8	83.0	83.6
16.00	69.9	72.9	78.0	81.9	83.9
17.00	70.9	72.6	77.7	82.1	85.1
18.00	70.0	73.4	77.9	81.2	83.3
AVERAGE EFFICIENCY(%)	**70.01**	**72.93**	**77.15**	**83.15**	**83.22**

The performance efficiency of the cooler with different pad thickness, without the product in terms of the saturation efficiency calculated from the temperature readings as expressed in equation 3.1 and presented in Appendix B is graphically presented in figure 4.3.

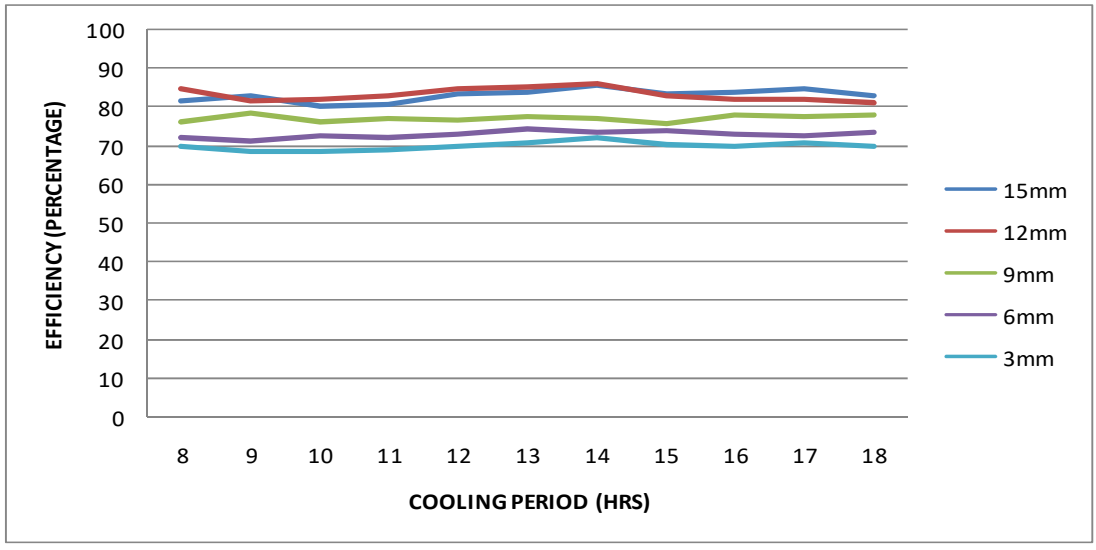

Figure 4.3 Efficiencies of the pad thickness against cooling period.

Figure 4.3 clearly shows that 15mm pad thickness and 12mm pad thickness have almost the same efficiency and the best performance followed by 9mm thickness, 6mm thickness and 3mm thickness in that order; The higher efficiency obtained with increasing pad thickness could be due to the resident time of the ambient air as it passes through the thickness of the pad. For a given pad thickness, the resident time increases as the thickness increases; thus allowing more time for the air to be saturated.

4.3.1 ANALYSIS OF VARIANCE FOR THE DIFFERENT PAD THICKNESS

Variate: EFF_%

Source of variation	d.f.	s.s.	m.s.	v.r.	F pr.
REP stratum	2	207.80	103.90	8.48	
REP.*Units* stratum					
THICKNES	4	4674.43	1168.61	95.43	<.001
Residual	158	1934.92	12.25		
Total	164	6817.15			

***** Tables of means *****

Variate: EFF_%

Grand mean 77.35

THICKNES	3.00	6.00	9.00	12.00	15.00
	70.08	72.93	77.26	83.24	83.23

*** Least significant differences of means (1% level) ***

Table	THICKNES
rep.	33
d.f.	158
l.s.d.	2.246

The statistical analysis on the effect of pad thickness shows a least significant difference (l.s.d)of 2.246. Hence there is significant difference between pad thicknesses of 3mm, 6mm, 9mm and12mm.

However, no significant difference exists between pad thicknesses of 12mm and 15mm; This implies that the higher the thickness of the pad the higher the efficiency. However, increasing the pad thickness beyond 12mm, has no significant increase in the efficiency of the system.

4.4 RESULTS OF LOAD TEST OF THE EVAPORATIVE COOLER.

The developed system was tested using four different products, pumpkin leave(Telfariaoccidentalis), okra(Abelmoschusesculentus), carrot(Dacuscarrota), and garden egg(Solanummelangena).

4.4.1 RESULT OF LOAD TEST OF EVAPORATIVE COOLING SYSTEM WITH FLUTED PUMPKIN LEAF (TELFARIA OCCIDENTALIS) .

The experimental data for the load test using Fluted Pumpkin Leaf is presented in appendix C.

The result of the total weight and percentage weight loss for both evaporative cooling condition and ambient condition extracted from the data in appendix C is presented as in table 4.6

The graph (figure 4.4) shows a substantial weight loss of the product stored in the ambient at the initial cooling period while the product inside the evaporating cooling chamber lose weight gradually. At about 3 days, almost all the products stored in the ambient have lost all the water while the evaporative cooling chamber continues to lose water up till 6days. This is due to the effectiveness of the cooling system.

TABLE 4.6: PERCENTAGE WEIGHT LOSS OF PRODUCT IN EVAPORATIVE COOLING CONDITION COMPARED WITH THAT OF AMBIENT.

% WT LOSS PER DAY FOR FLUTED PNMPKIN						
	COOLER CONDITION			AMBIENT CONDITION		
DAY	FINAL WT (g)	INITIAL WT. (g)	% WT LOSS	FINAL WT (g)	INITIAL WT. (g)	% WT LOSS
1	11.6	11.6	0.00	11.42	11.42	0.00
2	9.54	11.6	17.76	4.03	11.42	64.71
3	4.66	11.6	32.33	2.64	11.42	76.88
4	6.17	11.6	46.81	2.23	11.42	80.47
5	4.66	11.6	59.83	2.18	11.42	80.91
6	3.58	11.6	69.14	1.99	11.42	82.57
7	2.87	11.6	75.26	1.78	11.42	84.41

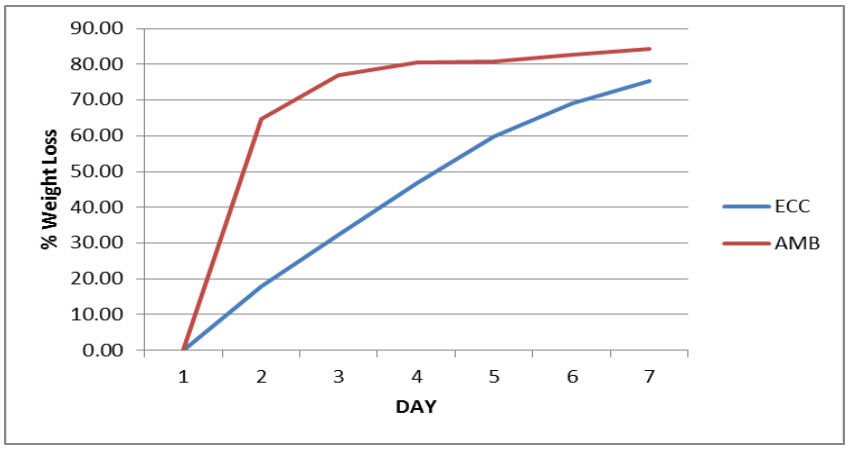

Figure 4.4: graphical comparison of the % weight loss of produce in both evaporative cooler and ambient condition over cooling period.

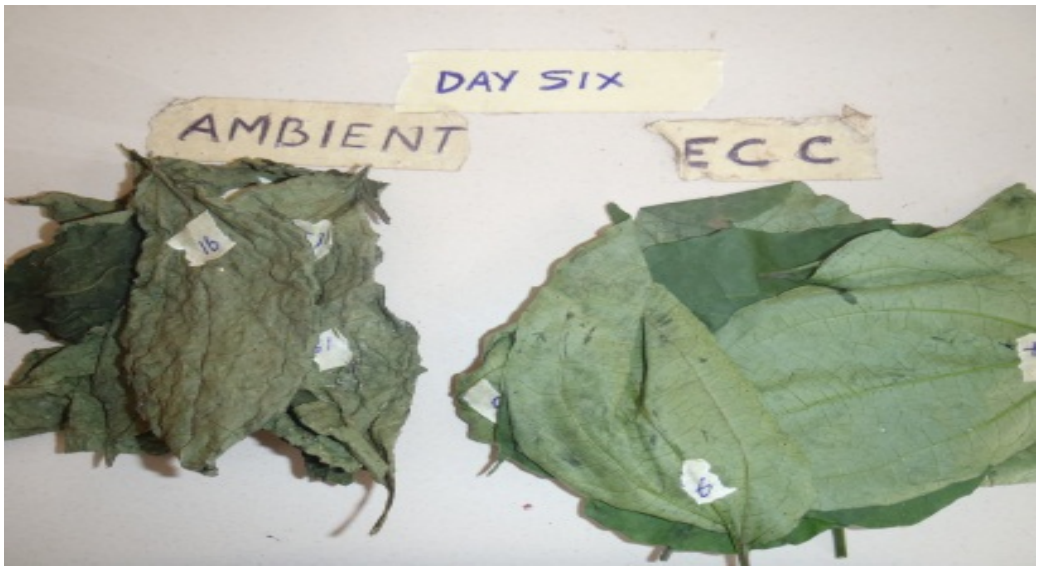

PLATE 4.1 PICTURES OF THE FLUTED PUMPKIN LEAVES AT DIFFERENT STAGES OF THE EXPERIMENT.

4.4.1.1 ANALYSIS OF VARIANCE *****FOR FLUTED PUMPKIN LEAVES

```
Variate: PERCENTAGE WEIGHT LOSS

 Source of variation     d.f.(m.v.)      s.s.m.s.v.r.Fpr.

 REP stratum                 3         330.115    110.038   11.35REP.*Units* stratum

COND                         1       29299.077  29299.077 3022.76  <.001

DAY                          6       84141.839  14023.640 1446.81  <.001
HRS                          2        2827.735   1413.867  145.87<.001
COND.DAY                     6        8161.716   1360.286  140.34<.001
COND.HRS                     2         131.343     65.672    6.78  0.002
DAY.HRS                    10(2)      2068.308    206.831   21.34  <.001
COND.DAY.HRS               10(2)      1344.629    134.463   13.87  <.001
Residual                  111(12)     1075.904      9.693

Total                     151(16)   101462.011

***** Tables of means *****

Variate:% WT LOSS

Grandmean  57.53

     COND        1        2
            44.32    70.74

      DAY        1        2        3        4        5        6     7

            12.01    42.26    55.06    63.62    70.89    76.30    82.57


     HRS     8.00    13.00    18.00
            54.10    55.19    63.30

     COND      DAY        1        2        3        4        5      6      7
        1              2.96    18.60    33.11    47.31    60.49  69.85  77.95
        2             21.07    65.93    77.00    79.92    81.29  82.74  87.19


     COND      HRS     8.00    13.00    18.00
        1             39.93    43.16    49.87
        2             68.26    67.23    76.72

*** Least significant differences of means (5% level) ***

Table                 COND         DAY         HRS        COND
                                                           DAY
rep.                    84          24          56          12
d.f.                   111         111         111         111
l.s.d.               0.952       1.781       1.166       2.519

Table                 COND         DAY        COND
                       HRS         HRS         DAY
                                               HRS
rep.                    28           8           4
d.f.                   111         111         111
l.s.d.               1.649       3.085       4.362
```

The result of the analysis shows wider significant difference between the means. The interaction effects show that DAY&HRS have significant

effect on the performance. The analysis show no significant difference in percentage weight loss between the hours of 8.00 (54.10%) and 13.00 (55.19%). While wider significant difference exist between the hours of 13.00 (55.19%) and 18.00 (63.30%), for least significant difference (L.S.D) of 1.166. This shows that greater percentage of weight loss occurred between the hours of 13.00 and 18.00. The results of the analysis also show that at the third day, COND.1 lost 77.00% while COND.2 lost an equivalent amount 77.95% in seven days. This show the effectiveness of the cooler in extending the shelve life of the produce.

4.4.2: RESULT OF THE LOAD TEST USING OKRA.

The experiment data for the load test of Evaporative cooling chamber using Okra is presented in Appendix D. the result of the total weight and percentage weight loss for both the product kept in the Evaporative Cooling Chamber and that of the Ambient condition as extracted from the data in Appendix D is presented in table 4.7

Table 4.7: Total weight and percentage weight loss of OKRA for both evaporation cooling chamber and ambient condition.

% WT LOSS PER DAY FOR OKRA						
	COOLER CONDITION			AMBIENT CONDITION		
DAY	FINAL WT (g)	INITIAL WT. (g)	% WT LOSS	FINAL WT (g)	INITIAL WT. (g)	% WT LOSS
0	143.58	143.58	0.00	140.43	140.63	0.00
1	129.95	143.58	9.49	82.69	140.63	41.20
2	120.83	143.58	15.84	54.12	140.63	61.52
3	111.88	143.58	22.08	37.13	140.63	73.60
4	105.5	143.58	26.74	27.6	140.63	80.37
5	100.5	143.58	30.00	24.46	140.63	82.61
6	96.57	143.58	32.74	22.23	140.63	83.48
7	94.64	143.58	34.08	22.09	140.63	84.29

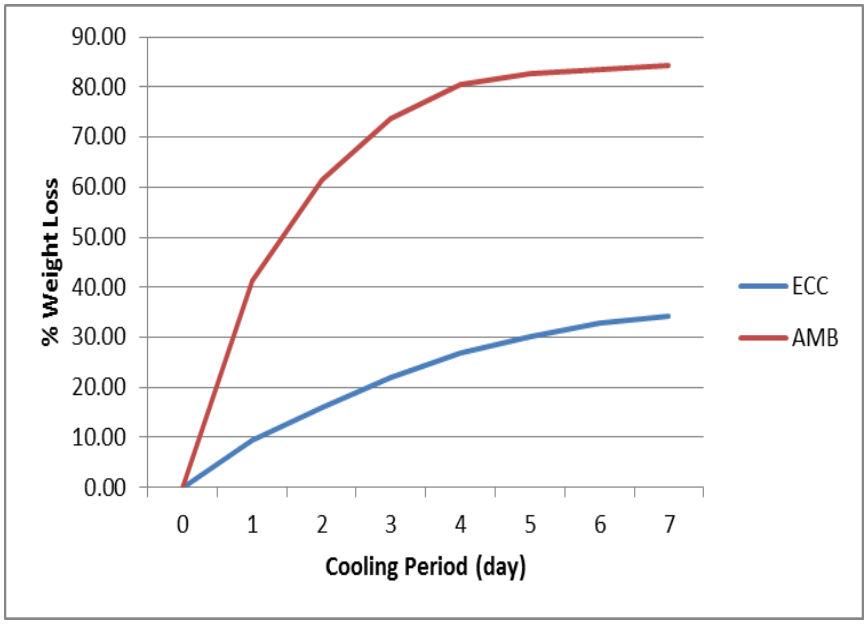

Figure 4.5: Graphical comparison of weight loss of OKRA kept in the evaporating cooling chamber with that of control experiment.

The graph shows that the product inside the chamber lose water at a slow rate over the cooling period while the control experiment lose substantial weight over a short period. From the graph, it takes the product inside evaporation cooling chamber 7days to lose 34.08% of water while the control experiment lose 35.00% of water after the first day. This reduction in percentage weight loss of the product inside the evaporative chamber is an indication of the effectiveness of the absorbent material in maintaining the evaporative chamber at high humidity and lower temperature.

4.4.2.1 ANALYSIS OF VARIANCE *****FOR OKRA

variate: LOSS

Source of variation	d.f.	s.s.	m.s.	v.r.	F pr.
REP stratum	3	511.996	170.665	18.27	
REP.*Units* stratum					
COND	1	79640.170	79640.170	8526.79	<.001
DAY	6	45703.649	7617.275	815.55	<.001
HRS	2	1688.486	844.243	90.39	<.001
COND.DAY	6	7925.625	1320.937	141.43	<.001
COND.HRS	2	416.374	208.187	22.29	<.001
DAY.HRS	12	1508.364	125.697	13.46	<.001
COND.DAY.HRS	12	909.369	75.781	8.11	<.001
Residual	123	1148.820	9.340		
Total	167	139452.852			

***** Tables of means *****

Variate: LOSS

Grand mean 43.27

COND	1	2
	21.50	65.05

DAY	1	2	3	4	5	6	7
	10.16	29.21	42.64	50.37	54.87	57.10	58.56

HRS	8.00	13.00	18.00
	39.41	43.23	47.18

COND	DAY	1	2	3	4	5	6	7
1		3.62	11.71	18.41	24.11	28.07	31.22	33.37
2		16.70	46.72	66.87	76.64	81.67	82.98	83.74

COND	HRS	8.00	13.00	18.00
1		19.64	21.31	23.56
2		59.19	65.14	70.80

***** Least significant differences of means (5% level) *****

Table	COND	DAY	HRS	COND DAY	CONDCOND HRS	DAY HRS
rep.	84	24	56	12	28	4
d.f.	123	123	123	123	123	123
l.s.d.	0.933	1.746	1.143	2.470	1.617	4.278

The result of the analysis shows wider significant difference between the means.21.50% for COND.1 and 65.05% forCOND.2. COND.2 loses weight initially at a fast rate from 16.70% in day one to76.64% in day four and thereafter remains almost constant. This shows that almost all the weight loss occurs within four days. COND.1, however, loses weight gradually from 3.62% in day one to 33.37% in day seven. The high reduction in weight loss of COND.1 is due to the effectiveness of the cooler in reducing the temperature and

simultaneously increasing the relative humidity of the environment, thus extending the shelve life of the produce.

4.5: FIRMNESS TEST FOR OKRA

The experimental data for the firmness test carried out on the okra is presented in Table 4.8

TABLE 4.8: EXPERIMENTAL DATA FOR THE FIRMNESS TEST ON OKRA

	DAY ONE				DAY THREE				DAY SEVEN			
	AMB		ECC		AMB		ECC		AMB		ECC	
WT(g)	T_1	T_2	T_1	T_2	T_1	T_2	T_1	T_2	T_1	T_2	T_1	T_2
200	24.0	23.5	24.0	23.7	13.4	13.0	20.6	20.2	9.6	8.5	18.7	18.3
400	24.0	22.0	24.0	23.0	13.4	12.5	20.6	19.3	9.6	7.5	18.7	17.8
600	24.0	22.0	24.0	22.5	13.4	11.4	20.6	18.0	9.6	6.0	18.7	17.4
800	24.0	21.0	24.0	21.5	13.4	10.0	20.6	17.3	9.6	5.5	18.7	17.1
1000	24.0	20.0	24.0	20.5	13.4	8.5	20.6	16.0	9.6	5.0	18.7	16.9
1200	24.0	19.5	24.0	20.0	13.4	8.0	20.6	16.0	9.6	5.0	18.7	16.7
1400	24.0	19.3	24.0	19.6	13.4	7.3	20.6	15.7	9.6	4.8	18.7	16.5
1600	24.0	18.9	24.0	19.6	13.4	6.9	20.6	15.4	9.6	4.7	18.7	16.4
1800	24.0	18.6	24.0	19.5	13.4	6.4	20.6	15.0	9.6	4.7	18.7	16.2
2000	24.0	18.0	24.0	18.5	13.4	6.2	20.6	14.7	9.6	4.6	18.7	16.0
2200	24.0	17.5	24.0	17.8	13.4	6.0	20.6	13.8	9.6	4.5	18.7	16.0
2400	24.0	17.1	24.0	17.3	13.4	5.8	20.6	12.6	9.6	4.5	18.7	15.8
2600	24.0	16.8	24.0	17.1	13.4	5.8	20.6	12.4	9.6	4.3	18.7	15.7
2800	24.0	16.7	24.0	17.1	13.4	5.5	20.6	12.3	9.6	4.3	18.7	15.5
3000	24.0	16.5	24.0	16.8	13.4	5.5	20.6	12.2	9.6	4.3	18.7	15.4

T_1= INITIAL THICKNESS (mm) T_2 = NEW THICKNESS (mm)

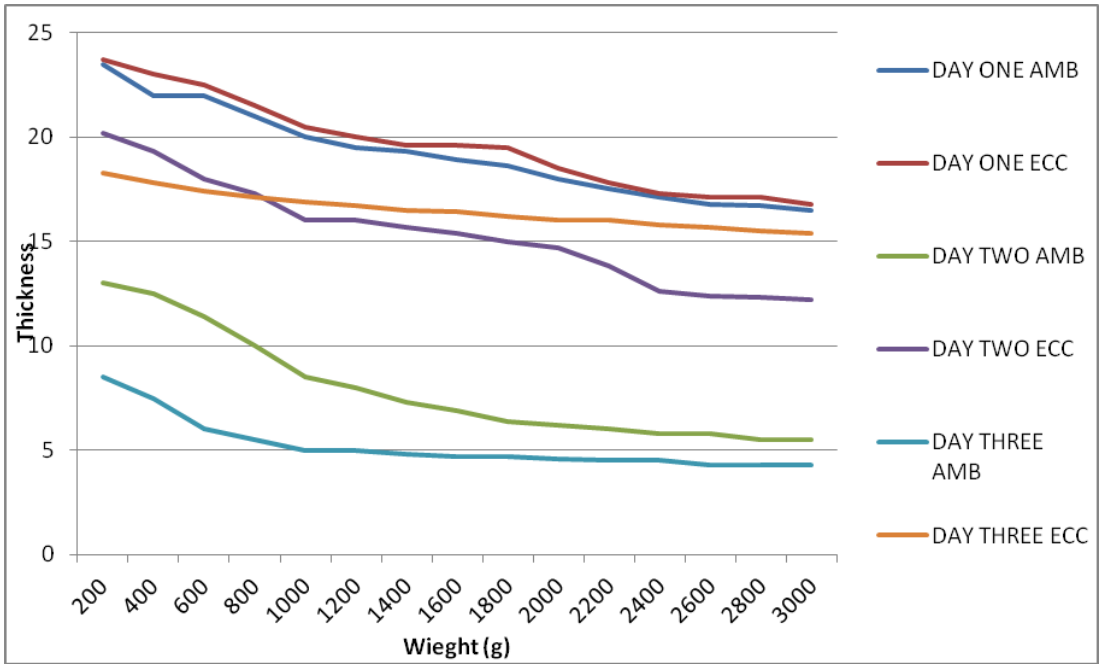

FIG. 4.6: GRAPH OF THE FIRMNESS TEST FOR OKRA

At the initial stage of the experiment both samples behave similarly under increasing load. At day three, the sample inside the cooler shows gradual decrease in thickness while the control experiment show a sharp decrease in thickness under increasing load. This is due to the sharp decrease in the firmness of the sample kept in the ambient environment. At day seven, the sample stored in the cooler still show gradual decrease in thickness under increasing load but this time faster than the initial stage. The sample stored in the ambient show a sharp decrease at the initial stage of loading and thereafter remains almost constant with increasing load, as can be seen in fig.4.6. This is because

at day seven, The sample stored under the ambient condition is almost completely dried.

PLATE 4.2: PICTURES OF THE VEGETABLE CROP (OKRA) AT DIFFERENT STAGES OF THE EXPERIMENT.

4.6: RESULT OF THE LOAD TEST WITH GARDEN EGG

The experimental data for the load test using Garden Egg is presented in Appendix E. the result of the total percentage weight loss for both the control experiment and the evaporative cooling chamber as extracted from the data in Appendix E is presented in table 4.9.

% WT LOSS PER DAY FOR GARDEN EGG						
	COOLER CONDITION			AMBIENT CONDITION		
DAY	FINAL WT (g)	INITIAL WT. (g)	% WT LOSS	FINAL WT (g)	INITIAL WT. (g)	% WT LOSS
0	338.2	338.2	0.00	346.4	346.4	0.00
1	327.3	338.2	3.22	327.5	346.4	5.46
2	324.8	338.2	3.96	316.1	346.4	8.75
3	322.6	338.2	4.61	307.1	346.4	11.35
4	320	338.2	5.38	298.1	346.4	13.94
5	317.6	338.2	6.09	289.2	346.4	16.51
6	315.4	338.2	6.74	282.5	346.4	18.45
7	315.1	338.2	6.83	277.4	346.4	19.92

TABLE 4.9: % WT LOSS PER DAY FOR GARDEN EGG.

Figure 4.7 shows the graphical behavior of the produce under the two conditions. The graph shows a sharp increase of % weight loss for the ambient condition while that of cooler condition, the % weight loss is gradual. The product inside the Evaporative Cooling chamber lost about 5.38%by weight in 4days; while that of ambient condition lost an equivalent amount in the first day.

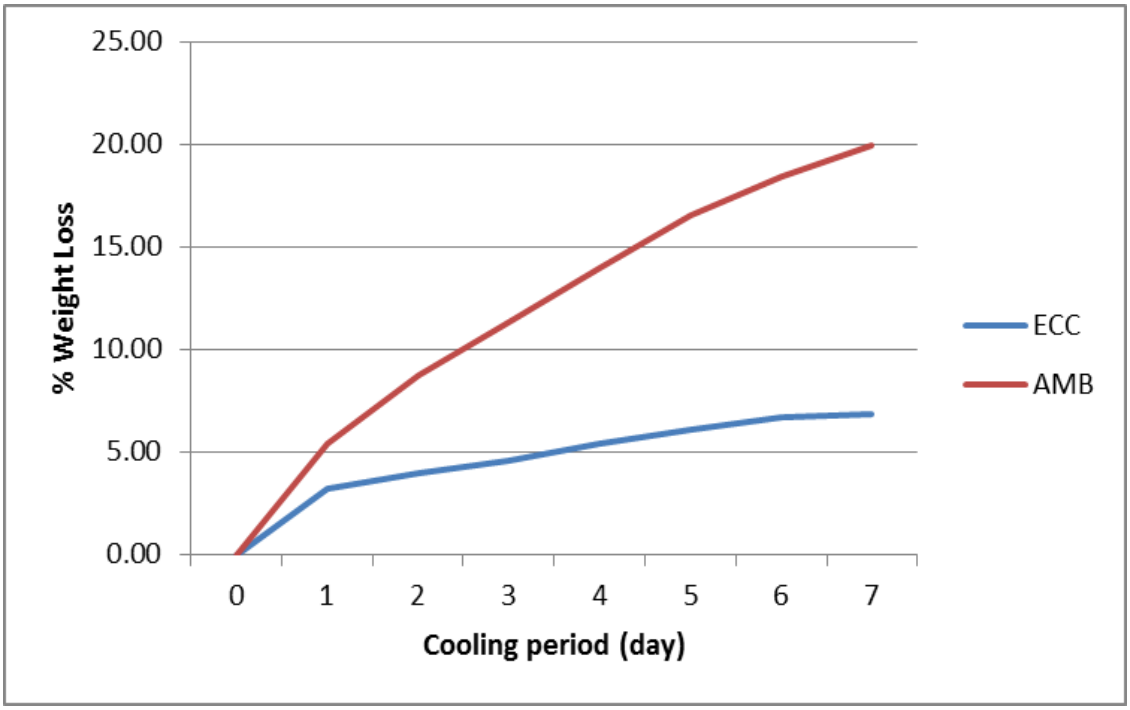

FIGURE 4.7: Comparison of % weight loss of Garden Egg for both Evaporating cooling chamber and control experiment.

4.6.1: ANALYSIS OF VARIANCE FOR GARDEN EGG

Variate:% WT LOSS

Source of variation	d.f.	s.s.	m.s.	v.r.	F pr.
REP stratum	3	257.930	85.977	57.42	
COND	1	2159.899	2159.899	1442.62	<.001
DAYS	6	2434.091	405.682	270.96	<.001
COND.DAYS	6	659.158	109.860	73.38	<.001
COND.HRS	2	15.878	7.939	5.30	0.006
COND.DAYS.HRS	12	1.424	0.119	0.08	1.000
Total	167	5815.977			

***** Tables of means *****

Grand mean 8.419

COND	1	2
	4.833	12.004

DAYS	1	2	3	4	5	6	7
	1.690	5.190	7.177	8.713	10.501	12.180	13.480

HRS	8.00	13.00	18.00
	7.709	8.225	9.321

COND	DAYS	1	2	3	4	5	6	7
1		1.169	3.633	4.458	5.078	5.846	6.594	7.054
2		2.212	6.747	9.895	12.349	15.156	17.766	19.905

COND	HRS	8.00	13.00	18.00
1		4.485	4.669	5.346
2		10.934	11.782	13.297

*** Least significant differences of means (5% level) ***

Table	COND	DAYS	HRS	COND DAYS	COND HRS	COND HRS DAY
rep.	84	24	56	12	28	4
d.f.	123	123	123	123	123	123
l.s.d.	0.3737	0.6992	0.4577	0.9888	0.6473	1.7126	1.7126

The result of the analysis shows wider significant difference between the means.4.833% for COND.1 and 12.004% forCOND.2. COND.2 loses weight initially at a fast rate from 2.212% in day one to19.905% in day seven. COND.1, however, loses weight gradually from 1.169% in day one to 7.054% in day seven. The high reduction in weight loss of COND.1 is due to the effectiveness of the cooler in reducing the temperature and simultaneously increasing the relative humidity of the environment, thus extending the shelve life of the produce.

4.7: COLOUR OBSERVATION .

The colour change of garden egg during the period of the experiment compared against a colour chart shown in table 4.10 is presented in table 4.11.

TABLE 4.10: COLOUR CHART FOR GARDEN EGG

COLOUR	NUMERICAL VALUE
GREEN	1
GREEN WITH LIGHT YELLOW MARK	2
GREEN WITH LIGHT YELLOW / RED MARK	3
REDISH GREEN	4
COMPLETE RED	5

Table 4.11: COLOUR CHANGE OF GARDEN EGG DURING EXPERIMENT

CONDITION	ECC	AMB	ECC	AMB	ECC	AMB	ECC	AMB	ECC	AMB	ECC	AMB
SPECIMEN	1	13	2	14	3	15	4	16	5	17	6	18
DAY												
0	1	1	1	1	1	1	1	1	1	1	1	1
2	1	1	1	2	1	2	1	2	1	1	1	2
4	1	2	1	4	1	3	1	3	1	2	1	3
6	1	4	1	4	1	5	1	4	1	4	1	5
8	1	5	1	5	1	5	1	5	1	5	1	5
10	2	5	1	5	3	5	2	5	1	5	1	5
12	2	5	2	5	3	5	2	5	2	5	1	5
14	2	5	2	5	3	5	2	5	2	5	1	5

CONDITION	ECC	AMB	ECC	AMB	ECC	AMB	ECC	AMB	ECC	AMB	ECC	AMB
SPECIMEN	7	19	8	20	9	21	10	22	11	23	12	24
DAY												
0	1	1	1	1	1	1	1	1	1	1	1	1
2	1	1	1	2	1	2	1	1	1	2	1	2
4	1	2	1	3	1	3	1	2	1	4	1	3
6	1	4	1	4	1	4	1	3	1	4	1	5
8	1	5	1	5	1	5	1	4	1	5	1	5
10	1	5	1	5	1	5	1	5	1	5	1	5
12	2	5	1	5	1	5	1	5	1	5	2	5
14	2	5	1	5	1	5	1	5	2	5	2	5

PLATE 4.3: PICTURES OF GARDEN EGG AT DIFFERENT STAGES OF THE EXPERIMENT

4.8: FIRMNESS TEST FOR GARDEN EGG

TABLE 4.12: EXPERIMENTAL DATA FOR THE FIRMNESS TEST ON GARDEN EGG

	DAY ONE				DAY TWO				DAY THREE			
	AMB		ECC		AMB		ECC		AMB		ECC	
WT(g)	T_1	T_2	T_1	T_2	T_1	T_2	T_1	T_2	T_1	T_2	T_1	T_2
200	40.5	40.5	40.5	40.5	37.2	37.2	39.2	38.9	33.7	33.7	37.3	37.8
400	40.5	40.5	40.5	40.5	37.2	37.1	39.2	38.9	33.7	33.5	37.3	37.8
600	40.5	40.5	40.5	40.5	37.2	37	39.2	38.9	33.7	33.2	37.3	37.7
800	40.5	40.5	40.5	40.5	37.2	36.8	39.2	38.8	33.7	33	37.3	37.7
1000	40.5	40.5	40.5	40.5	37.2	36.5	39.2	38.8	33.7	32.6	37.3	37.5
1200	40.5	40.3	40.5	40.5	37.2	36.4	39.2	38.8	33.7	32.5	37.3	37.5
1400	40.5	40.3	40.5	40.1	37.2	36.3	39.2	38.6	33.7	32.3	37.3	37.5
1600	40.5	40.3	40.5	40	37.2	36.1	39.2	38.6	33.7	32	37.3	37.3
1800	40.5	40	40.5	39.9	37.2	36.1	39.2	38.4	33.7	31.8	37.3	37.3
2000	40.5	40	40.5	39.9	37.2	36	39.2	38.3	33.7	31.6	37.3	37.3
2200	40.5	39.8	40.5	39.9	37.2	35.8	39.2	38.3	33.7	31.6	37.3	37.1
2400	40.5	39.8	40.5	39.9	37.2	35.8	39.2	38.3	33.7	31.6	37.3	37.1
2600	40.5	39.8	40.5	39.9	37.2	35.8	39.2	38.3	33.7	31.6	37.3	37.1

	DAY NINE				DAY TWELVE				DAY FIFTEEN			
	AMB		ECC		AMB		ECC		AMB		ECC	
WT(g)	T_1	T_2	T_1	T_2	T_1	T_2	T_1	T_2	T_1	T_2	T_1	T_2
200	32.1	32	36.3	36.2	31.4	31.3	35.4	35.4	31.3	31.2	34.6	34.6
400	32.1	32	36.3	36.2	31.4	31.1	35.4	35.2	31.3	30.9	34.6	34.4
600	32.1	31.7	36.3	36	31.4	30.8	35.4	35	31.3	30.4	34.6	34.4
800	32.1	31.5	36.3	35.6	31.4	30.6	35.4	34.6	31.3	30	34.6	34.1
1000	32.1	31.1	36.3	35.1	31.4	30.1	35.4	34.2	31.3	29.4	34.6	34
1200	32.1	30.4	36.3	34.7	31.4	29.5	35.4	33.7	31.3	28.9	34.6	34
1400	32.1	30.1	36.3	34.7	31.4	29.1	35.4	33.6	31.3	28.3	34.6	33.7
1600	32.1	30	36.3	34.6	31.4	28.7	35.4	33.5	31.3	28.1	34.6	33.6
1800	32.1	30	36.3	34.5	31.4	28.5	35.4	33.5	31.3	27.9	34.6	33.5
2000	32.1	30	36.3	34.5	31.4	28.4	35.4	33.5	31.3	27.8	34.6	33.5
2200	32.1	29.8	36.3	34.5	31.4	28.4	35.4	33.4	31.3	27.7	34.6	33.5
2400	32.1	29.8	36.3	34.5	31.4	28.4	35.4	33.4	31.3	27.7	34.6	33.5
2600	32.1	29.8	36.3	34.4	31.4	28.4	35.4	33.4	31.3	27.7	34.6	33.5

T_1= Initial thickness T_2 = final thickness.

The data for firmness test of garden egg is presented in table 4.12

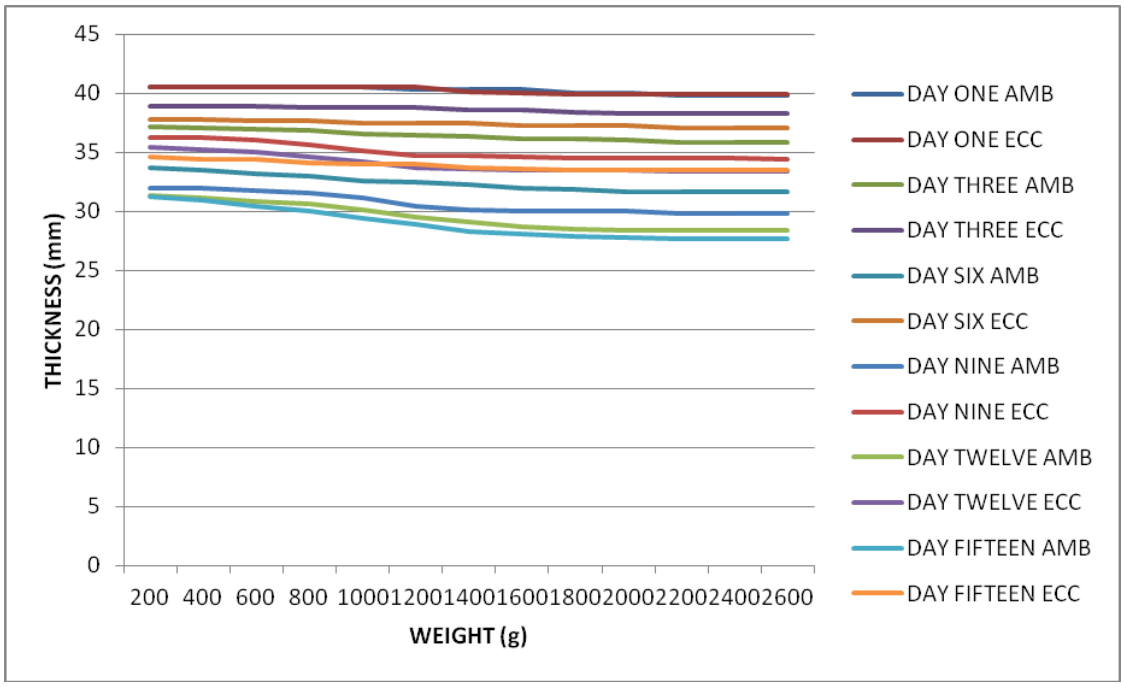

FIgure4.8: GRAPH OF THE FIRMNESS TEST FOR GARDEN EGG

At the initial stage of the experiment both samples behave similarly under increasing load, showing no decrease in thickness with increasing load. At day three, the sample inside the cooler shows no initial decrease in thickness. However, it began to show a slight decrease at 1600g.The control experiment shows gradual decrease from the beginning with increasing load.

4.9 RESULT OF THE LOAD TEST WITH CARROT.

The experimental data for the load test of Evaporating cooling chamber using carrot is presented in Appendix F. The result of the total

weight and percentage weight loss for both the control experiment and evaporative cooling chamber as extracted from Appendix F is presented in Table 4.13.

Table 4.13: Total weight and % weight loss of Carrot

% WT LOSS PER DAY FOR CARROT						
	COOLER CONDITION			AMBIENT CONDITION		
DAY	FINAL WT (g)	INITIAL WT. (g)	% WT LOSS	FINAL WT (g)	INITIAL WT. (g)	% WT LOSS
0	886.7	886.7	0.00	872.2	872.2	0.00
1	877.9	886.7	0.99	805.6	872.2	7.64
2	851.7	886.7	3.95	715.3	872.2	17.99
3	837.6	886.7	5.54	640.3	872.2	26.59
4	821.4	886.7	7.36	571.9	872.2	34.43
5	807.0	886.7	8.99	485.5	872.2	44.34
6	788.1	886.7	11.12	435.6	872.2	50.06
7	782.9	886.7	11.71	434.2	872.2	50.22

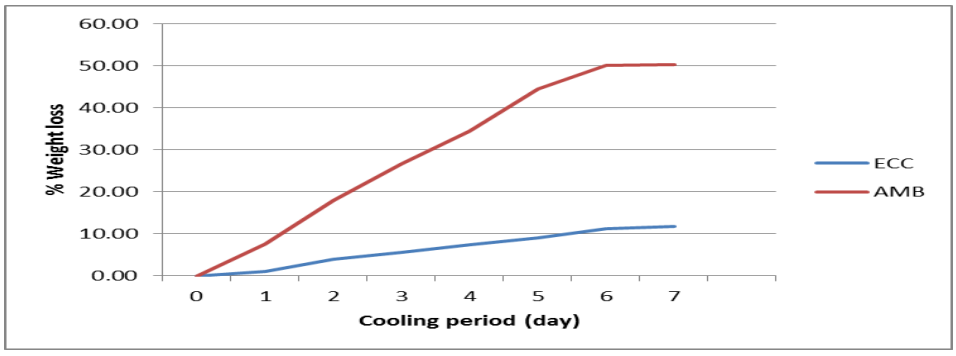

FIGURE 4.9: % Weight loss of carrot against cooling period

4.9.1 ANALYSIS OF VARIANCE FOR CARROT

Variate: PERCENTAGE WEIGHT LOSS

Source of variation	d.f.	s.s.	m.s.	v.r.	Fpr.
REP stratum	2	263.59	131.80	7.1	
COND	1	13283.85	13283.85	721.40	<.001
DAYS	6	10838.20	1806.37	98.10	<.001
HRS	2	212.80	106.40	5.78	0.004
COND.DAYS	6	4535.70	755.95	41.05	<.001
COND.HRS	2	91.89	45.95	2.50	0.089
COND.DAYS.HRS	12	10.96	0.91	0.05	1.000
Total	125	30797.52			

***** Tables of means *****

Variate: LOSS

Grand mean 15.41

COND	1	2
	5.14	25.68

DAYS	1	2	3	4	5	6	7
	1.40	5.84	10.24	16.20	20.79	25.48	27.92

HRS	8.00	13.00	18.00
	14.08	14.98	17.17

COND	DAYS	1	2	3	4	5	6	7
1		0.33	1.62	3.72	4.97	6.69	8.59	10.08
2		2.47	10.06	16.76	27.43	34.89		42.37

COND	HRS	8.00	13.00	18.00
1		4.64	5.05	5.73
2		23.51	24.91	28.61

*** Least significant differences of means (5% level) ***

Table	COND	DAYS	HRS	COND DAY	COND HRS	CON DAY HRS
rep.	63	18	42	9	21	3
d.f.	82	82	82	82	82	82
l.s.d.	1.521	2.845	1.863	4.024	2.634	6.970

The result of the analysis shows wide significant difference between the means. COND.1(ECC)looses 5.14% as against 25.68% for COND.2. The interaction effect of days shows that COND.2 looses 10.06% in two days while COND.1 loose an equivalent amount

(10.08%) in seven days. The high reduction in COND. 1 is due to effectiveness of the Evaporative cooling system.

from table 4.15, it can be seen that after day six almost all the product stored in the ambient have changed colour drastically and no longer have any value but those stored in the chamber still retain their colour. This is due to the effectiveness of the cooler.

4.10: COLOUR OBSERVATION FOR CARROT

TABLE 4.14: COLOUR CHART FOR CARROT

COLOUR	NUMERICAL VALUE
ORANGE	1
YELLOW ORANGE	2
FAILY DIRTY ORANGE	3
DIRTY ORANGE	4
TAN DIRTY ORANGE	5

TABLE 4.15: COLOUR CHANGE OF CARROT DURING THE EXPERIMENT

CONDITION	ECC	AMB	ECC	AMB	ECC	AMB	ECC	AMB	ECC	AMB
SPECIMEN	1	10	2	11	3	12	4	13	5	14
DAY										
0	1	1	1	1	1	1	1	1	1	1
2	1	1	1	1	1	1	1	2	1	1
4	1	2	1	2	1	2	1	3	1	2
6	1	3	1	3	1	2	1	3	1	3
8	1	3	1	4	1	3	1	4	1	4
10	1	4	1	4	1	4	1	4	1	4
12	1	5	1	5	1	4	2	5	1	5
14	1	5	1	55	1	5	2	5	1	5

CONDITION	ECC	AMB	ECC	AMB	ECC	AMB	ECC	AMB
SPECIMEN	6	15	7	16	8	17	9	18
DAY								
0	1	1	1	1	1	1	1	1
2	1	1	1	1	1	1	1	1
4	1	2	1	1	1	3	1	2
6	1	2	1	2	1	3	1	2
8	1	3	1	3	1	4	1	3
10	1	4	1	4	1	4	1	3
12	1	4	1	4	1	5	1	4
14	2	5	1	5	1	5	2	5

INITIAL STAGE

AMBIENT	ECC

DAY FOUR

DAY SEVEN

PLATE 4.4 PICTURES OF THE CARROT AT DIFFERENT STAGES OF THE EXPERIMENT

TABLE 4.16: EXPERIMENTAL DATA FOR THE FIRMNESS TEST ON CARROT

	DAY ONE				DAY TWO				DAY THREE			
	AMB		ECC		AMB		ECC		AMB		ECC	
WT(g)	T_1	T_2	T_1	T_2	T_1	T_2	T_1	T_2	T_1	T_2	T_1	T_2
200	34	34	34	34	28.7	28.7	33.6	33.6	22.3	22.3	33.1	33.1
400	34	34	34	34	28.7	28.7	33.6	33.6	22.3	22.1	33.1	33.1
600	34	34	34	34	28.7	28.1	33.6	33.6	22.3	21	33.1	33.1
800	34	34	34	34	28.7	27.7	33.6	33.6	22.3	20.3	33.1	33
1000	34	34	34	34	28.7	27.7	33.6	33.6	22.3	20.3	33.1	33
1200	34	34	34	34	28.7	27.3	33.6	33.6	22.3	19.6	33.1	33
1400	34	34	34	34	28.7	26.9	33.6	33.6	22.3	19.4	33.1	32.8
1600	34	34	34	34	28.7	26.5	33.6	33.6	22.3	19	33.1	32.8
1800	34	34	34	34	28.7	26	33.6	33.5	22.3	18.6	33.1	32.8
2000	34	34	34	34	28.7	25.6	33.6	33.5	22.3	18.4	33.1	32.8
2200	34	34	34	34	28.7	25.3	33.6	33.5	22.3	18.3	33.1	32.8
2400	34	34	34	34	28.7	25	33.6	33.4	22.3	18.3	33.1	32.8
2600	34	34	34	34	28.7	24.9	33.6	33.4	22.3	18.2	33.1	32.8

	DAY NINE				DAY TWELVE				DAY FIFTEEN			
	AMB		ECC		AMB		ECC		AMB		ECC	
WT(g)	T_1	T_2	T_1	T_2	T_1	T_2	T_1	T_2	T_1	T_2	T_1	T_2
200	19.1	19	32.8	32.8	16.7	16.7	32.3	32.3	14.2	14.2	31.8	31.8
400	19.1	18.7	32.8	32.8	16.7	16.5	32.3	32.3	14.2	13.8	31.8	31.8
600	19.1	18.3	32.8	32.8	16.7	16.2	32.3	32.1	14.2	13.6	31.6	31.6
800	19.1	17.6	32.8	32.8	16.7	16	32.3	32	14.2	13.6	31.6	31.6
1000	19.1	17.3	32.8	32.6	16.7	15.9	32.3	32	14.2	13.5	31.6	31.6
1200	19.1	16.8	32.8	32.6	16.7	15.6	32.3	32	14.2	13.2	31.6	31.5
1400	19.1	16.4	32.8	32.6	16.7	15.6	32.3	32	14.2	12.8	31.6	31.5
1600	19.1	15.9	32.8	32.6	16.7	15.3	32.3	31.9	14.2	12.7	31.6	31.5
1800	19.1	15.8	32.8	32.5	16.7	15.3	32.3	31.9	14.2	12.6	31.6	31.5
2000	19.1	15.8	32.8	32.5	16.7	15.3	32.3	31.8	14.2	12.6	31.6	31.4
2200	19.1	29.8	32.8	34.5	16.7	15.3	32.3	31.8	14.2	12.5	31.6	31.4
2400	19.1	29.7	32.8	34.4	16.7	15.2	32.3	31.7	14.2	12.5	31.6	31.3
2600	19.1	29.7	32.8	34.4	16.7	15.2	32.3	31.7	14.2	12.5	31.6	31.3

T_1 =initial thickness, T_2=New thickness

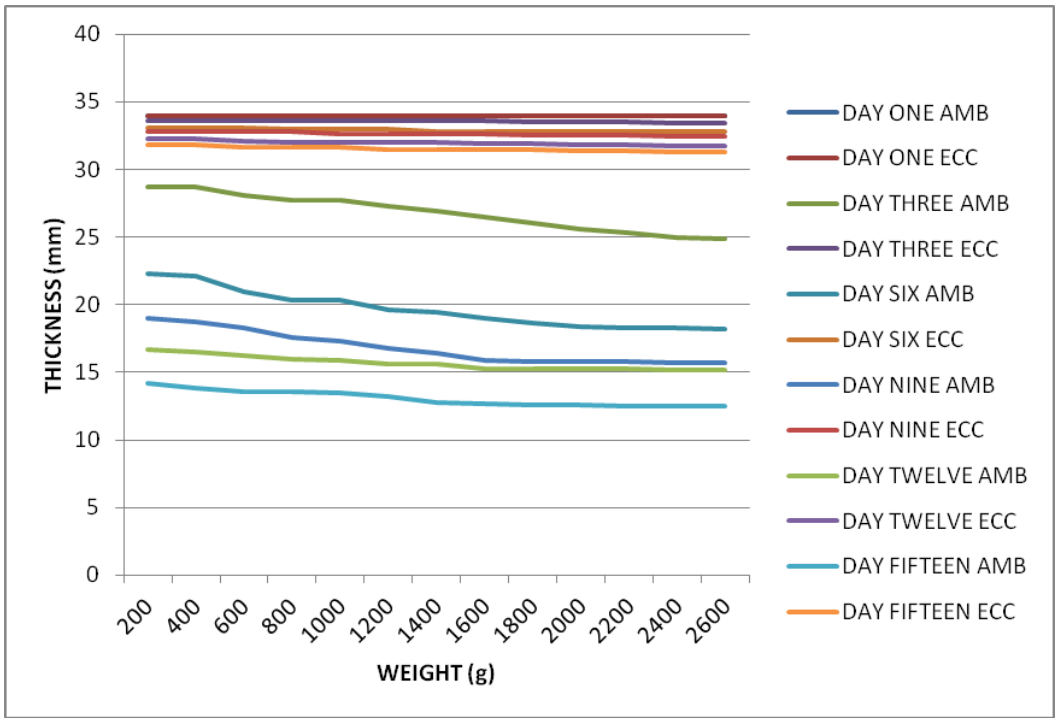

FIGURE 5.0: GRAPH OF THE FIRMNESS TEST FOR CARROT

It can be seen from the graph that condition 1 reduced in thickness from 34mm to 32mm while COND. 2 decreases from 34mm to 16mm after 15days. During loading, COND.1 changes very slightly with increasing load. This is done to the sharp reduction in the firmness of the produce stored in the ambient. It can be seen from the graph that at day fifteen the product the product store in COND. 2 respond slightly with increasing load. This is due to the fact that at that period, the carrot is almost completely dried and show little compression with increasing load.

4.11 CHRIPSINESS CHANGE FOR CARROT.

The chripsiness chart for carrot is presented in table 4.17 and the chripsiness change for carrot during the period of experiment is presented in table 4.18

TABLE 4.17 CHRIPSINESS CHART FOR CARROT

HARDNESS	NUMBERICAL VALUE
VERY HARD	1
HARD	2
MODERATELY HARD	3
SOFT	4
VERY SOFT	5

TABLE 4.18: CHRIPSINESS CHANGE DURING THE PERIOD OF EXPERIMENT

CONDITION	ECC	AMB	ECC	AMB	ECC	AMB	ECC	AMB	ECC	AMB	ECC	AMB
SPECIMEN DAY	1	6	2	7	3	8	4	9	5	10	6	12
0	1	1	1	1	1	1	1	1	1	1	1	1
3	1	3	1	2	1		1	3	1	3	1	2
6	1	4	1	4	1	4	1	4	1	4	1	3
7	1	5	1	5	1	5	1	5	1	5	1	4
10	1	5	1	5	1	5	1	5	1	5	1	5

From table 4.18, it can be seen that the product stored in the cooler have no change in hardness while the control experiment shows a clear change in hardness. at about six days the product no longer have economic value.

CHAPTER FIVE

CONCLUSION AND RECOMMENDATION

The objectives of this work are: to develop an effective cold storage system, to determine the effect of pad thickness on the efficiency of the cooler and to ascertain the behavior of some fruits and vegetable inside the system. An evaporative cooling system was developed with locally available material. The cooler was able to drop the ambient temperature by 9^0C and maintain high relative humidity within the range of 80% to 96%, with high cooling efficiency. Experiment carried out to determine the effect of pad thickness on the efficiency of the cooler shows that the efficiency increases as the pad thickness increases. But beyond the pad thickness of 12mm, there was no significant increase in efficiency with increasing pad thickness. The results of the analysis carried out with different fruits and vegetables show significant difference in weight loss, firmness change, colour change, etc. Hence, the experimental cooling system can store fruits and vegetables for much longer period than when handled traditionally.

Based on the observation during the experiment, the following recommendation are provided to and any further work on the system'

- There is need to determine the effect of water temperature and water flow rate on the performance of the system.
- There is need to determine the effect of air flow rate on the efficiency of the system
- A research should be carried out to compare the performance of the system with traditional and modern storage system for fruits and vegetable.

REFERENCES

Abdalla, K.N. and Abdalla, A.M. (1995).Utilization of Date Palm Leaves and Fibers as Wetted Pads in Evaporative cooler. Agricultural Mechanization in Asia, Africa and Latin America. Vol. 26 (2)/pp. 52-54

Adetuyi, F.O; T.A. Ayileye and I.B.O Dada (2008). Comparative study of Quality changes in Shea Butter coated Pawpaw cavica papaya fruit during storage Pakistan Journal of Nutrition 7(5): 658-662, 2008.

Affolayan, S.O. (1985). Evaporative cooling for the preservation of vegetables. Unpublished project report. Department of Agricultural Engineering, University of Ibadan.

Ajibola, O.O. (1991). Storage facilities and Requirements for Fruits and Vegetables. Paper presented at Nigeria society of engineering course on Designing. Construction and Maintenance of food storage system. Pp.9-11.

Alhadi, A. (1985). An investigation of the efficiency of low cost evaporative cooling. M.Sc. Thesis (unpublished), Silsoe College, UK.

American Fan Company,(2009). Fan Selection Documentary, Ohio, U. S. A.

Anyanwu E.E; 2004. Design and measured performance of a porous evaporative cooler for Preservation of fruits and vegetables, Energy Conversion and Management (45) 2187–2195

ASHRAE. 1977. *Handbook of Fundamentals.* Fourth Printing. Ch. 9. American Society of Heating, Refrigerating, and Air Conditioning Engineers. New York, NY

Aworh, O.C. (1988). Storage and processing of fruits, vegetables and oil seeds. Agro-based Industrialization seminar paper. Administrative staff College, Lagos, Nigeria.

Barre, H.J.; Sammet, L.L. and Nelson, G.L. (1988) Environmental and Functional Engineering of Agricultural Building, Van Nostrand Reinhold company, New York.

Brennan, J.U.: Butters. Cowell, N.D. and Lilly, A.E.V. (1990).Food engineering operation (3rd edition). Elsevier applied science pub. London

Dennis, C. (1979): The effect of storage conditions on the equality of vegetables in Quality stored and processed vegetables and fruit. P.W. Good enough and R.K. Afkin (Eds.) 329-339.

Dzivama A.U. (2000). Performance evaluation of an active cooling system for the storage of fruits and vegetables. Ph.D. Thesis, Department of Agricultural Engineering, University of Ibadan, Ibadan.

Earle, R.I. (1983): Unit operations in food processing. Perfamon Press. Oxford.

Esmay, M.L. and Dixon, J.E. (1986).Environmental Control for Agricultural Building. AVI Publishing Company, Inc. Westport, Connecticut.

FAO (1986).Farm Structure in Tropical Climate Food and agricultural Organization of the United Nations.

FAO/SIDA.(1986). Farm structures in tropical climates, 6FAO/SIDA. Rome.

FAO 1983.FAO production yearbook, vol. 34. FAO, Rome.

FAO(1981).Food loss Preservation in Perishable Crops. FAO Agricultural Services Bulletin No 43

George, J.B. and Marrot, J.(1983). The effect of humidity in plantain ripening scientia Hort 21:37-43

Harfield S.G.S. and Knee, M. (1988). Effect of water loss onaples in storage international journal of FST 23 (16): 573-583

Hobson, G.E. (1981). The short term storage of tomatoes fruits.J.hort, Sci.,56,Pp.363.

Igbeka JC, Olurin TO (2009). Performance Evaluation of Absorbent Materials in Evaporative Cooling System for the Storage of Fruits and Vegetables. Int. J. Food Eng., 5(3): 2.

Jain .D 2007.Development and testing of two-stage evaporative cooler .Building and Environment 42 (2007) 2549–2554

Johnson, P.N.T. (1986). Design and construction of a small commercial storage structure using the principle of evaporative cooling for extending the storage life of a perishable crop in tropical environment. Unpublished M.Sc. Thesis, Silsoe College, UK

Katsoulas N; Baille A and Kittas C 2001;. Effect of misting on transpiration and Conductance of a greenhouse rose canopy. Agricultural and Forest Meteorology, 106,233–47

Manuwa S.I. (1989). Comparison of different structural materials and shapes for constructing evaporative coolers. M.Sc. Project report

Unpublished, Department of Agricultural Engineering University of Ibadan.

Manuwa SI (1991).A Study of Some Structural Materials and Shapes for Constructing Evaporative Cooler". Res. Tech. J., Ondo State Polytechnic Owo, 3(1): 64-74.

McGregor, B.M. (1987). Tropical product Transport Handbook. United States Department of Agricultural, Handbook No. 668.

Ndirika, V.I.O and Asota, C.N. 1994. An Evaporative Cooling System for Rural Storage of Fresh Tomato. Journal of Agricultural Engineering and Technology, Vol. 2(4), pp.56-66.

Olosunde William Adebisi ; J.C. Igbeka and Taiwo Olufemi Olurin (2009). Performance Evaluation of absorbent materials in Evaporative Cooling System for the Storage of Fruits and Vegetables. International Journal of Food Engineering Volume 5, Issue 3

Rusten, E. (1985). Understanding evaporative cooling. Volunteers in Technical Assistance (VITA).Technical Paper Number 35.

Salunkhe, D.K. and S.S Kadam, 1995.Handbook of fruits science and Technology. New York: Dekker.

Sanni, L.A. (1999). Development of an evaporative cooling storage system for vegetable crops. M.Sc. project report, Department of Agricultural Engineering, Obafemi Awolowo University, IIe Ife, Nigeria

Seyoum TW, Woldetsadik K. (2004). Forced ventilation evaporative cooling of fruits: A case study on Banana, Papaya, Orange.
Lemon and Mandarin. Trop. Agric. J., 81(3): 179-185

Shewfelt, R. 1994. Quality characteristics of fruits and vegetables.

Stenvers, N. (1977). Hypobaric storage of horticulture product.Hor, Abst., Vol. 47,No. 9,44.

Thompson, D.A. (1983). M.Sc. Project report in the Department of Agricultural Engineering, University of Ibadan, Ibadan. Nigeria.

Tukura D.H. (1987). Evaporative cooling structures for use in the tropics.M.Sc Thesis (unpublished), Silsoe College, UK

UNIDO (1979). Appropriate Industrial Technology for food Storage Technology, No. 7. United Nations, New York.

Valez, C.S; Torres, F.E. and Lakshininarayane, S. (1977). Effect of refrigerated temperature on the incidence of chilling injury and repairing quality of mango fruit. Proc. of the Florida state, Hort. Sci., 90: 205-210.

Watt.R .1986.Evaporative cooling handbook.2nd edition. Chapman and Halt, New York.

Wiersma, F. (1983). Evaporative cooling in ventilation of agricultural structure , an American Society of Agricultural Engineers Monograph 6th series, Michigan, USA.

Wills, R.H.h; Lee, T.H., Grahams, D. McGlasson, W.B. and Hall, E.G. (1981). Post-harvest: an introduction to the physiology and handling of fruits and vegetables. Granada Pub. Co.

APPENDIX

APPENDIX A

TEMPERATURE VARIATION AT DIFFERENT LOCATIONS INSIDE THE EVAPORATIVE COOLING CHAMBER, COMPARED TO THE AMBIENT AND COOLING PAD TEMPERATURE.

	AMBIENT		COOLING PAD			DRY BULB/EVAPORATIVE COOLER				
TIME	DB^{0}C	RH %	DB^{0}C	WB^{0}C	RH%	A^{0}C	B^{0}C	C^{0}C	D^{0}C	E^{0}C
8:00	26	69	23	22.5	96	23	23.5	23	23.5	24
8:30	27	63	23	22.5	96	24	23	23	23.5	24
9:00	28	60	23	22.5	96	24	24	23.5	24	23.5
9:30	28	57	23	22.5	96	23.5	23.5	24	23.5	23.5
10:00	29	55	23.5	23	96	23.5	24	24	23.5	23.5
10:30	30	50	23.5	23	96	24	24	24.5	24	23.5
11:00	31	48	24	23.5	96	24.5	24	24.5	24	24
11:30	31	48	24.5	24	94	25	24.5	25	24.5	24.5
12:00	32	41	24.5	24	94	25	24.5	25	25	25
12:30	33	35	25	24.5	93	25.5	25	25.5	25.5	25
1:00	33	35	25	24	92	25	25	25	25	25.5
1:30	34	32	25	24	92	25.5	25.5	25	25	25.5
2:00	34	32	25	24	92	25.5	25.5	25	25	25.5
2:30	34	32	25	24	92	26	25.5	25.5	25.5	26
3:00	33	35	25	24	92	26	26	26	25.5	26
3:30	33	37	25	24	92	25.5	26	26	25.5	25.5
4:00	32	39	24.5	24.5	93	25.5	26	25.5	25	25
4:30	31	40	24.5	24	93	25	25.5	25.5	25	25.5
5:00	30	39	24.5	24	93	25.5	26	26	25	25
5:30	29	46	24	23.5	96	25	25.5	25	24.5	24
6:00	29	46	24	23.5	96	24.5	25	24.5	24.5	24

APPENDIX B

DB, WB, RH OF THE SYSTEM COMPARED TO AMBIENT WITH DIFFERENT PAD THICKNESS.

TABLE B1 3mm PAD THICKNESS.								
		AMBIENT			EVAPORATIVE COOLING CHEMBER ECC.			
DAY	HRS	DB (^{0}C)	WB (^{0}C)	RH%	DB (^{0}C)	WB (^{0}C)	RH%	EFF %
1	8	29	21	46	23.5	20.5	75	68.8
1	9	29	20.5	43	23.5	20.5	75	64.7
1	10	30	20.5	39	24	20.5	71	63.2
1	11	31	21	37	24	20.5	71	70
1	12	31	21	37	23.5	20	71	75
1	13	32	21.5	36	24.5	20.5	68	71.4
1	14	33	22	35	25	21	68	72.7
1	15	31	21	37	24	20.5	71	70
1	16	31	20	43	23.5	20	71	68.2
1	17	30	20	36	23	19.5	71	70
1	18	30	20	36	23	20	75	70
2	8	28	19	39	21.5	19	78	72.2
2	9	29	20.5	43	23	20.5	79	70.6
2	10	30	21.5	44	24	20.5	71	70.6
2	11	30	21	42	24	20.5	71	66.7
2	12	31	21	37	24	20.5	71	70
2	13	33	21.5	35	25	21	68	69.6
2	14	34	22	32	25.5	22	73	70.8
2	15	34	22	32	25.5	22	73	70.8
2	16	32	21.5	36	24.5	21	72	71.4
2	17	31	21	37	24	21	75	70
2	18	30	20	36	23	20	75	70
3	8	29	21	46	23.5	20.5	75	68.8
3	9	29	20.5	43	23	20.5	79	70.6
3	10	30	21	42	23.5	20	71	72.2
3	11	31	21	37	24	20.5	71	70
3	12	31	21	37	24.5	21	72	65
3	13	32	21.5	36	24.5	20.5	68	71.4
3	14	33	22	35	25	21	68	72.7
3	15	32	22	39	25	21	68	70
3	16	31	21	37	24	20.5	71	70
3	17	31	20	43	23	20	75	72.7
3	18	30	20	36	23	20	75	70

TABLE B2 6mm PAD THICKNESS.

		AMBIENT			EFFECTIVE COOLING CHEMBER ECC.			
DAY	HRS	DB (^{0}C)	WB (^{0}C)	RH%	DB (^{0}C)	WB (^{0}C)	RH%	EFF %
1	8	28	19.5	42	22	19.5	78	70.6
1	9	29	20	40	23	20	75	70.6
1	10	30	20.5	39	24	21	75	70.6
1	11	30	21	42	23.5	20.5	75	72.2
1	12	31	21	37	23.5	20.5	75	75
1	13	33	21.5	30	24.5	21.5	76	73.9
1	14	34	22	32	25.5	22.5	76	70.8
1	15	34	22	32	25.5	22.5	76	70.8
1	16	32	21.5	37	24.5	21.5	76	71.4
1	17	31	21	37	24	21	75	70
1	18	30	20.5	39	23	20	75	73.7
2	8	29	21	46	23	20.5	79	75
2	9	29	20.5	43	23	20	75	70.6
2	10	30	21	39	23.5	20.5	75	72.2
2	11	31	21	37	24	21	75	70
2	12	31	21	37	24	21	75	70
2	13	32	21.5	34	24.5	21.5	76	75
2	14	33	22	35	25	22	76	72.7
2	15	33	22	35	25	21.5	72	72.7
2	16	31	21	37	25	22	76	70
2	17	31	21	37	23.5	21	75	75
2	18	30	20.5	39	23	20	75	73.7
3	8	30	21.5	44	24	21.5	79	70.6
3	9	30	21	42	23.5	20.5	75	72.2
3	10	31	21	0.37	23.5	20.5	75	75.7
3	11	31	21.5	40	24	20.5	71	73.7
3	12	32	22	39	24.5	21	71	75
3	13	34	22	32	25	21.5	72	75
3	14	35	22	28	25	21.5	72	76.9
3	15	33	21.5	35	24	21	75	78.3
3	16	32	21	34	23.5	20.5	75	77.3
3	17	31	20	33	23	20	75	72.7
3	18	31	20	33	23	20.5	79	72.7

TABLE B3 9mm PAD THICKNESS.

		AMBIENT			EFFECTIVE COOLING CHEMBER ECC.			
DAY	HRS	DB (^{0}C)	WB (^{0}C)	RH%	DB (^{0}C)	WB (^{0}C)	RH%	EFF %
1	8	28	19	39	21	19.5	86	77.6
1	9	29	20.5	43	22.5	21	87	76.5
1	10	30	21	42	23.5	22	87	72.2
1	11	31	21	37	24	22	83	70
1	12	31	21	37	23.5	21	79	75
1	13	32	21	34	24	21	75	72.7
1	14	33	22	34	24	21	75	81.8
1	15	32	21	34	23.5	21	79	77.3
1	16	31	21.5	40	23.5	21	79	75
1	17	30	20	36	23	21	83	70
1	18	30	20.5	39	23	21	83	73.7
2	8	29	20.5	43	22.5	21	87	76.5
2	9	30	21	42	23	21	83	77.8
2	10	29	21	46	23	20.5	79	75
2	11	30	21.5	44	23	20	75	82.4
2	12	31	21	37	23.5	20.5	75	75
2	13	33	21.5	34	24	20.5	71	78.3
2	14	34	22	30	25	21	68	75
2	15	34	22	30	25	21	68	75
2	16	33	22	34	24	21	75	81.8
2	17	32	21.5	37	23	20.5	79	85.7
2	18	31	21	38	23	21	83	80
3	8	30	22	47	24	22.5	87	78
3	9	30	22	47	23.5	22	87	81
3	10	31	22	43	23.5	22	87	81
3	11	32	22.5	41	23.5	21.5	83	78.9
3	12	32	22	39	24	22	83	80
3	13	34	23	36	25	23	84	81.8
3	14	35	23	33	26	24	84	75
3	15	34	22	32	25	23	84	75
3	16	33	22	35	24.5	22.5	84	77.3
3	17	32	21	34	23.5	22	87	77.3
3	18	31	21	37	23	21.5	87	80

TABLE B4 12mm PAD THICKNESS.

		AMBIENT			EFFECTIVE COOLING CHEMBER ECC.			
DAY	HRS	DB (^{0}C)	WB (^{0}C)	RH%	DB (^{0}C)	WB (^{0}C)	RH%	EFF %
1	8	27	22.5	66	23	22.5	96	88.9
1	9	29	23	61	25	24	92	83.3
1	10	29	24	64	25	24	92	80
1	11	30	24	59	25	24	92	83.3
1	12	31	23.5	51	25	24	92	80
1	13	33	24	45	25	24	92	88.9
1	14	34	24	41	26	24.5	88	80
1	15	34	23.5	39	26	24.5	88	76.2
1	16	33	23	35	25	24	92	80
1	17	32	22.5	41	24	23	91	84.2
1	18	31	22	43	23.5	22.5	91	83.3
2	8	29	22	52	22.5	22	95	81.3
2	9	30	21	37	23	22.5	96	82.4
2	10	29	21.5	40	23	22	91	85.7
2	11	31	22	39	23.5	22.5	91	75
2	12	31	22	35	23	22	91	84.2
2	13	32	22	35	23	22.5	91	85.0
2	14	33	21.5	37	23.5	22.5	91	86.4
2	15	33	21.5	40	23.5	22.5	91	86.4
2	16	32	21	42	23	22	91	85.7
2	17	31	22	54	23	22	95	84.2
2	18	30	21	42	22..5	22	96	77.8
3	8	28	22	54	23	22	91	83.3
3	9	29	22.5	49	23.5	22	87	78.9
3	10	31	22	43	23.5	22.5	91	80.0
3	11	32	23	41	24	23	91	90.0
3	12	33	23	40	24	23	91	89.5
3	13	33	23.5	42	24.5	23	88	81.8
3	14	34	23	36	25	23.5	88	91.7
3	15	36	23	40	25	23.5	88	86.4
3	16	34	22	44	24.5	23.5	91	80.0
3	17	32	22	43	24	23	91	77.8
3	18	30	21.5	44	23	22	91	82.4

TABLE B5 15mm PAD THICKNESS.								
		AMBIENT			EFFECTIVE COOLING CHEMBER ECC.			
DAY	HRS	DB (^{0}C)	WB (^{0}C)	RH%	DB (^{0}C)	WB (^{0}C)	RH%	EFF %
1	8	27	22	63	23	22.5	96	75
1	9	28	22	57	23	22.5	96	83.5
1	10	29	22	52	23	22.5	96	85.7
1	11	31	23	44	25	24	92	75
1	12	32	23	44	25	24	92	77.8
1	13	33	23	40	25	24	92	80
1	14	33	23	40	25	24	92	80
1	15	33	23	40	25	24	92	80
1	16	32	22	39	25	24	92	77.8
1	17	31	22	43	23	22.5	96	88.9
1	18	30	21	42	22.5	21.5	95	83.3
2	8	28	20	45	21	20.5	95	87.5
2	9	28	20	45	21	20.5	95	87.5
2	10	29	20	40	22	21	91	77.8
2	11	30	21	42	22.5	21.5	91	83.3
2	12	32	21.5	39	22.5	21.5	91	90.5
2	13	33	22	35	23	22	91	90.9
2	14	34	22	34	23	22	91	91.7
2	15	33	22	35	23	22	91	90.9
2	16	32	21.5	37	22.5	22	91	90.5
2	17	30	21	42	22	21.5	95	88.9
2	18	30	21	42	22	21	91	88.9
3	8	29	21	46	22	21.5	95	83.3
3	9	30	21	42	23	22	91	77.8
3	10	31	22	42	23.5	23	91	77.8
3	11	31	21.5	39	22	24	92	84.2
3	12	33	22	35	24	24	92	81.8
3	13	34	23	36	25	24	92	81.8
3	14	34	23.5	34	25	23.5	88	85.7
3	15	33	23	40	25	23.5	88	80
3	16	31	22	43	23.5	23.5	91	83.3
3	17	30	21	42	23	23	91	77.8
3	18	30	21	42	23	23	91	77.8

DB^{0}C= DRY-BULB TEMPERATURE

WB^{0}C= WET-BULB TEMPERATURE.

RH %= RELATIVE HUMIDITY.

EFF= EFFICIENCY.

APPENDIX C

EXPERIMENTAL DATA FOR VEGETABLE FLUTED PUMPKIN LEAF.(TelfariaOccidentalis)

TABLE C1	EVAPORATIVE COOLER CONDITION BY WEIGHT (g)											
WEIGHTRANGE	0.60g-0.79g			0.80g-0.99g			1.00g-1.10g			1.20g-1.39g		
SPECIMEN	1	2	3	4	5	6	7	8	9	10	11	12
DAY												
1												
	0.78	**0.61**	**78**	**0.85**	**0.87**	**0.89**	**1.05**	**0.98**	**1**	**1.37**	**1.19**	**1.23**
	0.69	**0.54**	**0.7**	**0.75**	**0.75**	**0.8**	**0.98**	**0.9**	**0.91**	**1.23**	**1.06**	**1.1**
2	**0.67**	**0.52**	**0.68**	**0.72**	**0.74**	**0.78**	**0.95**	**0.86**	**0.87**	**1.19**	**1.02**	**1.07**
	0.63	**0.48**	**0.64**	**0.68**	**0.69**	**0.73**	**0.9**	**0.81**	**0.83**	**1.15**	**0.98**	**1.02**
	0.58	**0.44**	**0.59**	**0.62**	**0.62**	**0.64**	**0.82**	**0.72**	**0.74**	**1.08**	**0.92**	**1.02**
3	**0.56**	**0.42**	**0.57**	**0.59**	**0.6**	**0.61**	**0.79**	**0.69**	**0.7**	**1.03**	**0.87**	**0.91**
	0.54	**0.4**	**0.52**	**0.56**	**0.55**	**0.57**	**0.76**	**0.66**	**0.66**	**0.96**	**0.82**	**0.85**
	0.5	**0.37**	**0.48**	**0.51**	**0.48**	**0.51**	**0.69**	**0.6**	**0.61**	**0.89**	**0.75**	**0.77**
4	**0.47**	**0.35**	**0.46**	**0.48**	**0.46**	**0.48**	**0.66**	**0.56**	**0.57**	**0.85**	**0.71**	**0.72**
	0.43	**0.32**	**0.42**	**0.44**	**0.41**	**0.43**	**0.6**	**0.5**	**0.52**	**0.78**	**0.65**	**0.67**
	0.38	**0.28**	**0.38**	**0.38**	**0.34**	**0.37**	**0.52**	**0.41**	**0.44**	**0.7**	**0.57**	**0.6**
5	**0.36**	**0.27**	**0.35**	**0.36**	**0.33**	**0.34**	**0.5**	**0.39**	**0.41**	**0.67**	**0.54**	**0.57**
	0.33	**0.25**	**0.33**	**0.31**	**0.29**	**0.31**	**0.46**	**0.34**	**0.37**	**0.63**	**0.51**	**0.53**
	0.29	**0.22**	**0.29**	**0.25**	**0.23**	**0.26**	**0.46**	**0.28**	**0.32**	**0.58**	**0.45**	**0.47**
6	**0.28**	**0.22**	**0.29**	**0.23**	**0.22**	**0.25**	**0.39**	**0.27**	**0.3**	**0.56**	**0.43**	**0.45**
	0.25	**0.2**	**0.24**	**0.21**	**0.21**	**0.23**	**0.37**	**0.25**	**0.27**	**0.53**	**0.4**	**0.42**
	0.21	**0.18**	**0.22**	**0.18**	**0.18**	**0.2**	**0.34**	**0.21**	**0.22**	**0.47**	**0.36**	**0.38**
7	**0.2**	**0.17**	**0.21**	**0.17**	**0.17**	**0.19**	**0.33**	**0.2**	**0.2**	**0.45**	**0.35**	**0.36**
	0.18	**0.15**	**0.19**	**0.17**	**0.16**	**0.18**	**0.31**	**0.2**	**0.19**	**0.44**	**0.34**	**0.36**

TABLE C2	AMBIENT CONDITION BY WEIGHT (g)											
WEIGHT RANGE	**0.60g-0.79g**			**0.80-0.99g**			**1.00g-1.10g**			**1.20g-1.39g**		
SPECIMEN	**13**	**14**	**15**	**16**	**17**	**18**	**19**	**20**	**21**	**22**	**23**	**24**
HRS												
8												
13	**0.72**	**0.72**	**0.63**	**0.91**	**0.91**	**0.86**	**1**	**0.96**	**0.99**	**1.31**	**1.25**	**1.16**
18	**0.45**	**0.42**	**0.34**	**0.52**	**0.51**	**0.41**	**0.31**	**0.6**	**0.5**	**0.87**	**0.68**	**0.74**
8	**0.36**	**0.31**	**0.27**	**0.4**	**0.39**	**0.34**	**0.24**	**0.45**	**0.27**	**0.72**	**0.49**	**0.58**
13	**0.29**	**0.26**	**0.22**	**0.32**	**0.32**	**0.28**	**0.23**	**0.37**	**0.25**	**0.6**	**0.42**	**0.47**
18	**0.19**	**0.18**	**0.15**	**0.23**	**0.22**	**0.2**	**0.22**	**0.25**	**0.22**	**0.43**	**0.28**	**0.31**
8	**0.19**	**0.16**	**0.13**	**0.21**	**0.22**	**0.2**	**0.22**	**0.25**	**0.23**	**0.38**	**0.3**	**0.33**
13	**0.18**	**0.15**	**0.12**	**0.2**	**0.21**	**0.19**	**0.22**	**0.23**	**0.22**	**0.33**	**0.27**	**0.31**
18	**0.16**	**0.14**	**0.12**	**0.19**	**0.19**	**0.18**	**0.21**	**0.21**	**0.22**	**0.26**	**0.25**	**0.39**
8	**0.16**	**0.13**	**0.12**	**0.19**	**0.18**	**0.21**	**0.2**	**0.21**	**0.25**	**0.25**	**0.25**	**0.28**
13	**0.16**	**0.13**	**0.11**	**0.18**	**0.17**	**0.18**	**0.2**	**0.19**	**0.19**	**0.24**	**0.23**	**0.27**
18	**0.16**	**0.13**	**0.1**	**0.17**	**0.17**	**0.18**	**0.2**	**0.19**	**0.18**	**0.24**	**0.23**	**0.27**
8	**0.15**	**0.13**	**0.1**	**0.17**	**0.17**	**0.18**	**0.2**	**0.18**	**0.18**	**0.23**	**0.23**	**0.27**
13	**0.15**	**0.13**	**0.1**	**0.17**	**0.17**	**0.18**	**0.2**	**0.18**	**0.18**	**0.23**	**0.23**	**0.26**
18	**0.14**	**0.12**	**0.09**	**0.16**	**0.16**	**0.17**	**0.2**	**0.17**	**0.17**	**0.22**	**0.22**	**0.25**
8	**0.14**	**0.12**	**0.09**	**0.16**	**0.16**	**0.17**	**0.2**	**0.16**	**0.17**	**0.21**	**0.22**	**0.25**
13	**0.13**	**0.12**	**0.09**	**0.16**	**0.16**	**0.17**	**0.19**	**0.16**	**0.16**	**0.2**	**0.21**	**0.24**
18	**0.13**	**0.11**	**0.08**	**0.15**	**0.15**	**0.16**	**0.18**	**0.15**	**0.16**	**0.2**	**0.2**	**0.23**
8	**0.13**	**0.11**	**0.08**	**0.15**	**0.15**	**0.15**	**0.18**	**0.15**	**0.15**	**0.19**	**0.19**	**0.22**
13	**0.12**	**0.1**	**0.07**	**0.14**	**0.14**	**0.15**	**0.17**	**0.14**	**0.15**	**0.19**	**0.19**	**0.22**

APPENDIX D

EXPERIMENTAL DATA FOR OKRA

TABLE D1 EVAPOURATIVE COOLER CONDITION BY WEIGHT (g)

WEIGHT RANGE		8.00g-9.99g								
SPECIMEN		1			2			3		
DAY	HRS	W	H	D	W	H	D	W	H	D
1	8	8.89	87.1	18.8	9.71	75.2	19.6	9.64	82.3	19
	13	8.58	86.3	17.7	9.4	75.2	19.4	9.38	81.7	18
	18	8.19	85	16.5	8.99	75	19	9.06	80.9	16.7
2	8	8.01	85	76.5	8.78	75	18.5	8.85	80.9	16.7
	13	7.79	85	16.5	8.61	75	18.1	8.65	80.9	16.5
	18	7.52	85	16.4	8.4	75	17	8.4	80.9	16.3
3	8	7.38	85	15.8	8.19	75	17	8.25	80.9	16.3
	13	7.08	84.5	15.7	7.97	74.8	16.9	8.1	80.5	16.2
	18	6.69	83.8	15.5	7.68	74.3	16.7	7.89	80	16
4	8	6.59	83.6	14.3	7.59	74.2	16.5	7.8	80	16
	13	6.39	83	14.2	7.4	73.5	16.1	7.77	80	15.9
	18	6.17	82.1	13.9	7.22	72.7	15.6	7.74	80	15.8
5	8	6.14	82.1	13.8	7.15	72.6	15.5	7.72	79.9	15.7
	13	6.11	82	13.4	7.12	72.5	15.3	7.66	79.8	15.6
	18	5.9	81.9	12.7	7	72.5	15	7.54	79.8	15.4
6	8	5.87	81.7	12.5	6.9	72.5	15	7.5	79.8	15.3
	13	5.8	81.4	12.1	6.8	72.4	14.8	7.45	79.7	15.2
	18	5.7	81.7	11.7	6.8	72.3	14.6	7.37	79.7	15.1
7	8	5.68	81	11.7	6.8	72.3	14.5	7.36	79.7	15.1
	13	5.65	79.7	11.4	6.7	72.2	14.3	7.32	79.7	15
	18	5.6	79.2	10.8	6.6	72.2	14	7.27	79.7	15

WEIGHT RANGE		10.00g-11.99g								
SPECIMEN		4			5			6		
DAY	HRS	W	H	D	W	H	D	W	H	D
1	8	10.84	85	20.4	10.76	90.6	19.6	11.06	84	20.7
	13	10.36	85	19.3	10.37	90.2	19.4	10.56	83.4	19.5
	18	9.78	85	18	9.92	89.6	19	9.97	82.5	18
2	8	9.56	85	18	9.77	89.4	19	9.69	82.5	18
	13	9.3	85	18	19.5	89	18.9	9.39	82.5	17.7
	18	8.95	85	18	9.11	88.6	18.6	9.2	82.5	17.2
3	8	8.76	85	17.8	8.88	88.6	18	8.85	82.5	17.1
	13	8.43	84.8	17.3	8.65	88.5	17.8	8.55	82.4	16.91
	18	8.02	84.5	16.6	8.43	88.4	17.5	8.2	82.3	16.7
4	8	7.89	84.2	16	8.3	88.3	17.4	8	82.3	16.5
	13	7.72	83.9	15.11	8	87.9	16.9	7.91	82.1	16.2
	18	7.46	83.4	13.5	7.78	87.1	16.2	7.5	81.7	15.7
5	8	7.44	83.3	13.5	7.7	87.1	16.2	7.48	81.7	15.7
	13	7.21	82.9	13.4	7.62	8.62	16.1	7.31	81.3	15.4
	18	6.86	82.2	13.3	7.57	86.6	16.1	6.98	80.3	15
6	8	6.84	82.2	13.3	7.48	86.5	16.1	6.95	80.3	15
	13	6.72	81.8	13.2	7.41	86.3	16	6.81	80.2	14.8
	18	6.4	81.2	13.2	7.32	86.1	15.8	6.5	79.2	14.5
7	8	6.38	81	13.2	7.29	86.1	15.8	6.48	79.2	14.5
	13	6.32	80.6	13.1	7.26	86	15.7	6.45	78.9	14.4
	18	6.24	80	13	7.2	85.9	15.7	6.48	78.6	14.1

WEIGHT RANGE	12.00g-13.99g									
SPECIMEN		7			8			9		
DAY	HRS	W	H	D	W	H	D	W	H	D
1	8	13.42	71.5	23.7	13.04	96.8	21.6	13.01	59	21.8
	13	13.07	71.1	23.1	12.64	95.7	20.9	12.6	58.7	21.5
	18	12.67	70.5	22.3	12.15	94.2	20	12.1	58.3	21.2
2	8	12.42	70.5	21.9	11.92	94.2	20	11.8	58	20.5
	13	12.2	70.3	21.3	11.7	94.1	19.8	11.6	58	20.2
	18	11.98	70	20.4	11.48	94	19.6	11.25	58	20
3	8	11.76	70	20.4	11.22	94	17.2	11.01	58	20
	13	11.65	70	20.4	11	94	16.9	10.72	58	19.17
	18	11.26	70	20.4	10.59	94	16.6	10.34	58	19.2
4	8	11.18	70	20.4	10.46	94	15.6	10.18	58	19.2
	13	10.89	69.8	20.1	10.21	93.91	15.6	9.98	57.8	18.81
	18	10.58	69.3	19.6	9.92	93.6	15.5	9.61	57.4	18.3
5	8	10.52	69.3	19.6	9.83	93.6	15.5	9.5	57.4	18.3
	13	10.45	69.2	19.1	9.7	93.3	15.2	9.35	57.3	18.3
	18	10.27	69.2	18.7	9.55	92.9	14.3	9.1	57	18.3
6	8	10.23	69.2	18.6	9.48	92.8	14.2	9	57	18.2
	13	10.15	69.1	18.1	9.32	92.6	14	8.8	57	18
	18	10	68.9	17.6	9.1	92.3	13.7	8.56	56.8	17.6
7	8	9.98	68.9	17.6	9.04	92.3	13.7	8.5	56.8	17.6
	13	9.91	68.8	17.2	8.93	92.2	13.3	8.43	56.6	17.5
	18	9.81	68.7	16.5	8.79	92	12.9	8.32	56.4	17.3

WEIGHT RANGE	14.00g-15.99g									
SPECIMEN		10			11			12		
DAY	HRS	W	H	D	W	H	D	W	H	D
1	8	14.28	89.2	24.8	14.62	98.8	19.4	14.31	82	22.8
	13	13.78	89.2	23.8	14.22	98.7	19.4	13.83	81.7	22.2
	18	13.13	89	22.5	13.67	98.6	19.3	13.27	81.2	21.3
2	8	12.82	89	21	13.34	98.6	19	12.99	80.5	21
	13	12.54	88.8	21	13.1	98.6	18.9	12.73	80.5	21
	18	12.18	88.3	21	12.74	98.6	18.7	12.41	80.5	21
3	8	11.9	88	20.1	12.43	98.6	18.8	12.2	80.5	21
	13	11.75	87.9	20	12.11	98.5	18.6	11.85	80.4	20.5
	18	11.32	87.7	20	11.73	98.4	18.4	11.28	80.3	19.7
4	8	11.15	87.5	20	11.54	98	18.3	11.2	80.3	19.5
	13	10.81	87.3	19.6	11.26	97.5	18.11	11.13	80.1	19.1
	18	10.63	87.1	19	10.88	96.7	17.9	10.77	80	18.5
5	8	10.4	87.1	19	10.63	96.7	17.8	10.67	80	18.3
	13	10.2	86.5	18.7	10.51	96.7	17.5	10.49	79.5	17.8
	18	9.93	85.7	18.3	10.33	96.7	16.8	10.26	78.8	17.2
6	8	9.82	85.6	18.3	10.23	96.6	16.7	10.2	78.7	17
	13	9.62	85.3	18	10.07	96.3	16.1	10.12	78.5	16.8
	18	9.41	84.9	17.5	9.82	95.9	15.2	10	78.1	16.5
7	8	9.35	84.8	17.4	9.75	95.8	15.1	9.96	98	16.5
	13	9.24	84.7	17.3	9.61	75.6	14.9	9.94	77.9	16.3
	18	9.1	84.5	17.1	9.41	95.2	14.7	9.9	77.9	16.1

W=WEIGHT(g), H= HEIGHT(mm) D= DIAMETER(mm)

TABLE D2 AMBIENT CONDITION

WEIGHT RANGE	8.00-9.99g									
SPECIMEN		13			14			15		
DAY	HRS	W	H	D	W	H	D	W	H	D
1	8	8.96	72.6	19	9.09	76.7	19	8.12	81.8	17.7
	13	7.66	70.5	17.4	7.6	74.8	16.9	6.92	78	16
	18	5.91	67.5	13.3	5.58	70.7	14	5.14	73.3	14
2	8	5.32	64.3	13.3	4.92	69.2	13.2	14.51	72.7	12.9
	13	4.27	63.6	12.5	4.3	65.3	11.9	3.5	71.2	11.8
	18	3.76	62.4	11.2	3.55	60.2	10	3.05	69.6	10.3
3	8	3.72	62.4	11	3.26	60.2	9.7	2.74	68.2	9.8
	13	3.17	57.4	9.9	2.86	58.1	8.9	2.41	66.5	9.4
	18	2.39	50.2	8.3	2.41	55	8	2.01	64.5	8.8
4	8	2.36	50	8.2	2.32	54.5	7.2	1.9	63.6	7.8
	13	2.16	47.1	8	2.12	54.4	6.7	1.71	63.3	7.7
	18	1.88	45.2	7.5	1.84	54.2	6	1.45	63	7.6
5	8	1.79	44.9	7.4	1.81	53.9	5.8	1.43	62.7	7.4
	13	1.74	44.6	7.2	1.75	53.6	5.5	1.36	62.5	6.9
	18	1.65	44.2	6.9	1.66	53.3	5	1.25	62.1	6.3
6	8	1.65	44	6.9	1.66	53.2	4.9	1.25	62.1	6.2
	13	1.65	43.8	6.8	1.65	53.2	4.9	1.24	62	6.2
	18	1.64	43.4	6.8	1.64	53.1	4.7	1.24	61.9	6.1
7	8	1.64	43.3	6.8	1.64	53.1	4.7	1.24	61.9	6.1
	13	1.63	43.2	6.7	1.64	53	4.7	1.23	61.8	6.1
	18	1.62	43.2	6.7	1.64	53	4.6	1.22	61.8	6

WEIGHT RANGE	10.00-11.99									
SPECIMEN		16			17			18		
DAY	HRS	W	H	D	W	H	D	W	H	D
1	8	10.22	91.1	17.9	10.82	86	19	10.14	82.1	19
	13	8.68	88.5	15.8	9.12	80.7	16.4	8.94	80.3	16.5
	18	6.38	85	13.4	6.84	74.7	12	6.05	77.2	13.3
2	8	5.74	84.6	12.1	6.24	72.3	12	5.47	76.9	11.9
	13	5.02	82.8	11.8	5.49	70.3	11.1	4.67	75.7	11.2
	18	4.01	80.6	11.3	4.57	67.8	10.3	3.51	74.1	10.3
3	8	3.69	80.3	9.8	4.07	66	9.7	3.13	73.6	9.7
	13	3.3	79.5	9	3.57	64.8	9.1	2.78	72.2	9.2
	18	2.71	78.5	8	2.89	60.3	8.4	2.28	70.2	8.5
4	8	2.56	76.7	7.8	2.71	59.7	7.3	2.18	70	7.6
	13	2.31	75.5	7.5	2.36	59.4	7.2	1.96	69.3	7
	18	1.97	73.9	7	2.1	59	7	1.67	68.2	6.2
5	8	1.88	73.9	6.9	2	58.9	6.9	1.6	68.2	6.2
	13	1.07	73.7	6.4	1.91	58.5	6.8	1.57	68.1	6.1
	18	1.68	73.5	5.8	1.78	58.3	6.6	1.51	67.9	5.9
6	8	1.67	73.5	5.8	1.78	58.3	6.6	1.5	67.9	5.9
	13	1.67	73.4	5.7	1.76	58.2	6.5	1.48	67.9	5.9
	18	1.67	73.3	5.6	1.76	58	6.5	1.48	67.8	5.8
7	8	1.67	73.3	5.6	1.76	58	6.5	1.48	67.8	5.8
	13	1.66	73.3	5.6	1.75	58	6.4	1.47	67.7	5.7
	18	1.66	73.2	5.5	1.74	58	6.4	1.47	67.6	5-Jan

WEIGHT RANGE	12.00-13.99									
SPECIMEN		19			20			21		
DAY	HRS	W	H	D	W	H	D	W	H	D
1	8	12.61	84	19	12.89	95.7	21.7	12.57	95.9	19.3
	13	11.1	82.3	17.1	10.6	92.7	19.3	11	93.3	17.3
	18	9.01	80	14.6	7.6	90	16.6	9	90.3	14.9
2	8	8.28	79.4	13.7	6.8	89.9	16.2	8.29	89.9	13.8
	13	7.47	78.3	13	5.7	88.7	15	7.45	88.8	13.1
	18	6.36	77.5	12.1	4.36	87.2	13.2	6.35	87.4	12.3
3	8	5.79	77.1	11.6	3.98	87	12.7	5.81	87.2	11.8
	13	5.14	76.1	10.9	3.42	85.7	12.2	5.21	86	11.1
	18	4.34	75.6	10	2.74	84	11.6	4.36	84.3	10.2
4	8	4.08	75.3	9.8	2.55	83.1	10.9	4.1	83	9.9
	13	3.72	74.5	8.8	2.23	82.6	10.2	3.75	82.7	9
	18	3.27	73.5	7.8	1.81	82	9.4	3.3	82.2	7.9
5	8	3.11	73.4	7.8	1.7	81.8	9.4	3.14	81.7	7.8
	13	2.96	73.3	7.7	1.62	81	9.3	3	81.1	7.8
	18	2.75	73	7.7	1.5	80	9.2	2.81	80.3	7.7
6	8	2.73	73	7.7	1.5	80	9.2	2.78	80.3	7.7
	13	2.69	73	7.6	1.48	79.6	9.2	2.71	79.9	7.6
	18	2.65	72.5	7.6	1.43	79.1	9.1	2.66	79.5	7.6
7	8	2.64	72.5	7.6	1.43	79	9.1	2.63	79.5	7.6
	13	2.6	71	7.6	1.42	79	9.1	2.6	79.4	7.6
	18	2.6	71	7.5	1.41	78	9.1	2.58	79.3	7.5

WEIGHT RANGE	14.00-15.99									
SPECIMEN		22			23			24		
DAY	HRS	W	H	D	W	H	D	W	H	D
1	8	15.78	73.7	26.7	14.09	105	21.1	15.34	72	22.8
	13	13.51	72.2	23.7	11.44	101.5	18.7	13.21	68.5	20.4
	18	10.71	70.2	20	8.44	97.6	16	10.77	64.5	17.4
2	8	9.69	69.7	19.7	7.44	96.7	14	9.99	64	16.1
	13	8.49	68.7	18	5.88	96.2	12.2	8.97	63.7	15.9
	18	7	67.3	17.7	4.88	95.5	10	7.85	62.4	15.7
3	8	6.4	67	17.5	4.28	95	9.9	7.25	61.4	15
	13	5.73	65.8	16.3	3.62	93.4	9.2	6.51	60.2	13.8
	18	4.8	64.4	14.7	2.85	91.4	8.3	5.51	58.8	12.2
4	8	4.48	64.2	14.4	2.69	88.4	8.2	5.21	57.2	11.8
	13	4	63.9	12.4	2.37	88.1	8.2	4.81	56.8	11.4
	18	3.38	63.5	11	1.99	87.6	8.2	4.22	56.2	10.9
5	8	3.18	63.5	11	1.95	87.4	8.2	4.01	56	10.9
	13	2.91	63.3	11	1.91	87	8	3.84	55.7	10.6
	18	2.61	63	11	1.85	86.5	7.8	3.64	55.1	10.2
6	8	2.58	63	11	1.84	86.5	7.8	3.52	55	10.2
	13	2.55	63	10.9	1.8	86.3	7.8	3.45	54.9	10.2
	18	2.5	62.8	10.9	1.76	86	7.6	2.89	54.7	10
7	8	2.49	62.7	10.9	1.76	86	7.6	2.85	54.7	10
	13	2.45	62.6	10.9	1.74	86	7.6	2.55	54.6	10
	18	2.4	62.4	10.8	1.7	85.5	7.5	2.05	54.6	9.8

APPENDIX E

EXPERIMENTAL DATA FOR GARDEN EGG

TABLE E2 EVAPORATIVE COOLING CONDITION BY WEIGHT (g)

WEIGHT RANGE		8.00 - 9.99 (g)								
SPECIMEN		1			2			3		
DAY	HRS	W	H	D	W	H	D	W	H	D
1	8	22.1	44.5	32.5	19.4	44.3	32.6	17.8	44.6	29.9
	13	22	44.2	32.5	19.2	44	32.6	17.7	44.6	29.9
	18	21.1	43.6	32.4	18.6	43.7	32.3	17.3	44.2	29.8
2	8	21	42.5	31	18.5	43.7	32.1	17.2	44.1	29.5
	13	20.9	42.5	29.2	18.5	43.7	32.1	17.2	44.1	29.3
	18	20.8	42.2	28.6	18.4	43.4	29.4	17.1	43.7	28.7
3	8	20.8	41.5	28.5	18.3	43.4	28.9	17	43.5	28.5
	13	20.7	41.5	28.3	18.3	43.4	28.7	17	43.4	28.5
	18	20.6	41.4	27.8	18.2	43.4	28.4	16.9	43	28.3
4	8	20.6	41.4	27.5	18.1	43.4	28.3	16.8	43	28.3
	13	20.6	41.1	27.2	18.1	42.7	27.8	16.8	42.8	28
	18	20.5	40.7	26.8	18	41.7	27	16.7	42.5	27.4
5	8	20.4	40.6	26.8	17.9	41.4	27	16.7	42.5	27
	13	20.4	40.4	26.6	17.9	41.4	27	16.7	42.2	26.8
	18	20.3	40.1	26	17.8	41.2	26.8	16.6	41.7	26.3
6	8	20.2	40	26.7	17.8	40.9	26.7	16.6	41	26
	13	20.2	40	26.5	17.7	40.9	26.7	16.6	41	26
	18	20	40	25.9	17.6	40.8	26.7	16.5	41	25.9
7	8	20	40	25.9	17.6	40.8	26.7	16.5	41	25.9
	13	20	40	25.9	17.6	40.5	26.7	16.5	40.6	25.9
	18	20	40	25.8	17.6	39.9	26.5	16.5	40	25.9

WEIGHT RANGE		10.00 - 11.99 (g)								
SPECIMEN		4			5			6		
DAY	HRS	W	H	D	W	H	D	W	H	D
1	8	23.1	53.2	30	25.4	50.3	32	23.3	52.4	29.7
	13	23	53.2	29.3	25.3	50.3	32	23.1	52.4	29.7
	18	22.4	53	28.7	24.5	49.7	32	22.7	51	29.7
2	8	22.3	53	28.7	24.4	49.5	32	22.6	50.4	28.5
	13	22.3	52.8	27.9	24.4	49.5	32	22.5	50	28.4
	18	22.2	52.4	26.7	24.3	49.3	31.9	22.4	48	28.2
3	8	22.2	51.8	26	24.2	48.8	31.6	22.3	48	28
	13	22.2	51.7	26	24.2	48.3	31.6	22.3	47.6	27.7
	18	22.1	51.5	26	24.1	47.2	31.5	22.2	46.3	27
4	8	22.1	51.5	26	24.1	47.2	31	22.6	46.3	27
	13	22.1	51.9	26	24	46.8	30.9	22.2	45.9	27
	18	22	50.5	26	23.9	46	30.6	22.1	45.3	27
5	8	22	49.9	26	23.9	46	29.5	22	44.7	26.9
	13	21.9	48.6	25.9	23.8	46	29.4	22	44.4	26.2
	18	21.8	47.5	25.6	23.7	45.5	29.2	21.9	43.9	25.9
6	8	21.8	47.3	25.1	23.7	45.2	28.9	21.8	43.7	25.4
	13	21.7	47.1	25.1	23.7	45.2	28.9	21.8	43.4	25.4
	18	21.1	46.8	25.1	23.7	44.9	28.9	21.7	42.8	25.4
7	8	21.1	46.8	25.1	23.7	44.9	28.9	21.7	42.8	25.4
	13	21.1	46.8	25.1	23.7	44.9	28.9	21.7	42.8	25.3
	18	21	46.7	25	23.7	44.9	28.9	21.7	42.6	25.2

WEIGHT RANGE		12.00 - 13.99 (g)								
SPECIMEN		7			8			9		
DAY	HRS	W	H	D	W	H	D	W	H	D
1	8	26.8	52.4	36.8	31.7	48.1	37.3	32.7	60	33
	13	26.8	52.4	36.8	31.5	48.1	37.3	32.4	60	33
	18	26.5	52	36	30.5	48	36.6	31.7	59.2	32.4
2	8	26.3	50	36	30.4	48	36.5	31.7	59.2	32
	13	26.3	51.5	35.4	30.3	47.9	36.4	31.6	59.2	31.8
	18	26.1	50.9	34.8	30.2	47.7	36.3	31.5	59	31.5
3	8	25.9	50.9	34.5	30.1	47.5	36.3	31.5	58.7	31.4
	13	25.9	50.7	34.3	30.1	47.5	36.3	31.4	58.7	31.3
	18	25.8	50.5	34	29.9	47.5	36	31.3	58.6	31
4	8	25.7	50.5	33.8	29.9	47.5	35.7	31.3	58.5	30.7
	13	25.6	50.5	33	29.9	47.1	35.2	31.3	58.3	30.4
	18	25.5	49.9	32	29.8	46.6	34.6	31.2	58	29.9
5	8	25.5	49	32	29.7	45.5	34.5	31.1	58	29.8
	13	25.4	48.9	31.9	29.6	45.3	34.5	31.1	57.6	29.6
	18	25.2	48.6	31.6	29.5	45.1	34.3	31	57	29.2
6	8	25.2	48.4	30.8	29.5	45.1	34.1	31	57	29.1
	13	25.2	48.4	30.8	29.4	45.1	34.1	30.9	57	29.1
	18	25.1	48.3	30.7	29.3	45	34.1	30.9	57	29.1
7	8	25.1	48.3	30.7	29.3	45	34.1	30.9	57	29.1
	13	25.1	48.3	30.6	29.3	45	34.1	30.9	57	29.1
	18	25.1	48.3	30.6	29.3	45	34	30.9	56.9	29

WEIGHT RANGE		14.00 - 15.99 (g)								
SPECIMEN		10			11			12		
DAY	HRS	W	H	D	W	H	D	W	H	D
1	8	38.3	57.9	38	38.9	64.3	37	38.7	59.8	38.8
	13	38.2	57.9	38.5	38.7	64	37	38.5	59.6	38.8
	18	37.8	56.2	37	37.9	63.9	36	37.6	59.2	38.7
2	8	37.6	56	36.5	37.8	63.5	35.3	37.5	59.2	38.4
	13	37.5	56	36	37.7	63	35	37.4	59	38.1
	18	37.4	56	35.2	37.6	62.4	34.7	37.3	58.5	37.9
3	8	37.3	54.7	35	37.5	62.4	34.7	37.2	58.4	37.4
	13	37.3	54.7	35	37.5	62.3	33.2	37.2	57.5	37.3
	18	37.1	54.6	35	37.4	62	31.6	37.1	56	37
4	8	37	54.6	34.8	37.3	62	31.5	37	56	37
	13	37	54.3	34.2	37.3	61.8	31.5	37	55	36.5
	18	36.8	53.9	33.2	37.2	61.4	30.9	36.8	54.5	36.1
5	8	36.7	53	33.2	37.2	61.4	30.9	36.8	54.3	36.1
	13	36.7	52.7	33	37.2	61	30.5	36.8	54	36
	18	36.6	52.3	32.6	37.1	60	30.5	36.6	54	35.4
6	8	36.5	52.1	32.5	37	60	30.3	36.5	54	35
	13	36.5	52	32.1	37	60	30.3	36.5	54	35
	18	36.4	52	31.5	36.9	59.9	30	36.2	54	35
7	8	36.4	52	31.5	36.9	59.9	30	36.2	54	35
	13	36.3	52	31	36.9	59.9	29.9	36.2	54	35
	18	36.3	51.8	30.3	36.8	59.9	29.6	36.2	53.9	35

TABLE E2 AMBIENT CONDITION.

WEIGHT RANGE	8.00 - 9.99 (g)									
SPECIMEN		13			14			15		
DAY	HRS	W	H	D	W	H	D	W	H	D
1	8	21.6	46.4	31.9	20.3	38.7	33.1	21.7	49.6	30.9
	13	21.6	45.2	31.5	20	37.4	33	21.6	49.5	30.4
	18	20.7	44.9	31.4	19.3	36.5	32.6	20.6	49.4	29.6
2	8	20.5	44.9	31	19.1	36.2	30.4	20.4	48.5	28.6
	13	20.4	44.5	30.7	19	35.8	30	20	48	28.3
	18	20.1	44	30.2	18.5	35.2	29.5	19.5	47.5	27.8
3	8	20	44	30	18.3	35	29.2	19.2	47.2	27.6
	13	19.8	43.7	29.4	17.9	34.7	29	18.9	47	27.5
	18	19.5	43.2	28.5	17.8	34.1	28.8	18.7	46.3	27.2
4	8	19.3	43	28.3	17.6	34	28.6	18.5	46.2	27
	13	19	42.8	28.2	17.4	34.5	28	18.4	46	26.7
	18	18.5	42.4	28	17.89	33.8	27.2	18	45.8	26.3
5	8	18.3	42.3	27.8	17	33.4	26.3	17.8	45.6	26.1
	13	18.1	42.2	27.5	16.8	33.2	26	17.6	45.4	25.8
	18	17.8	42	27	16.6	33.1	25.5	17.2	45	25.5
6	8	17.6	41.4	27	16	32.8	25.3	17.2	45	25.4
	13	17.3	41.3	26.9	15.8	32.8	25.2	17	44.6	25.3
	18	16.8	40.9	26.6	15.5	32.6	25.1	16.9	44	25
7	8	16.7	40.8	26.5	15	32.5	25	16.7	44	25
	13	16.6	40.5	26.4	15	32.3	25	16.5	43.8	24.8
	18	16.3	40	26.1	14.8	32	24.7	16.2	43.4	24.3

WEIGHT RANGE	10.00 - 11.99 (g)									
SPECIMEN		16			17			18		
DAY	HRS	W	H	D	W	H	D	W	H	D
1	8	25.3	46.8	35.3	24.5	48.9	32.5	24	50.6	32.8
	13	24.7	46.5	35.1	24.1	48.8	32.5	23.4	50.4	32.6
	18	23.8	46.1	34.8	23.3	48.6	32.5	22.4	50.2	32.3
2	8	23.6	45.7	34.2	23.1	48.2	32.2	22.2	50	32
	13	23.4	45.5	33.8	22.8	47.9	31.7	21.8	49.5	31.6
	18	23	45.2	33.2	22.2	47.4	31	21.3	48.2	31
3	8	23	45	32	22	47	30.8	21	48	30
	13	22.8	44.8	31.8	21.9	46.8	30.5	20.9	47.9	29.8
	18	22.3	44.1	31	21.7	46.5	30	20.7	47.8	29.2
4	8	22.1	44	30.5	21.5	46.3	29.9	20.5	47.6	29
	13	22	43.7	30.1	21.4	46.3	29.7	20.3	47.3	28.3
	18	21.8	43	29.6	21	46	29.5	20	47	27.5
5	8	21.6	42.8	29.4	21	46	29.3	20	46.8	26.9
	13	21.4	42.6	29	20.8	45.8	28.9	19.7	46.5	26.6
	18	21	42	28.7	20.3	45.3	28.2	19.1	46	26.1
6	8	21	42	28.4	20	45	28.2	19	46	25.9
	13	20.9	42	28.4	19.7	45	28.1	18.9	46	25.9
	18	20.6	42	28.3	19.1	44.8	28	18.7	45.8	25.8
7	8	20.5	42	28	19	44.6	28	18.6	45.7	25.6
	13	20.3	41.9	27.8	18.8	44.4	27.6	18.4	45.5	25.4
	18	20	41.6	27.5	18.4	44	27	18.1	45	25

WEIGHT RANGE	12.00 - 13.99 (g)									
SPECIMEN		19			20			21		
DAY	HRS	W	H	D	W	H	D	W	H	D
1	8	32.9	48	40.8	27.2	56.2	33	32.9	53.4	37.2
	13	32.5	48	40.7	28.8	56	33	32.1	53.4	37.2
	18	31.7	47.8	40.5	28.1	55.7	33	31.2	53	37.2
2	8	31.5	45	40	27.8	55.5	31.7	31	52.5	36.5
	13	31.1	44.5	38.5	27.7	55.2	31.5	30.7	52.2	36.2
	18	30.6	43.3	37.7	27.4	54.7	30.9	30.1	51.7	35.7
3	8	30.2	42.7	36.1	27	54.5	30.6	29.9	51.5	35.5
	13	30	42.5	36	26.8	54.4	30.4	29.7	51.3	34.5
	18	29.7	42	35.7	26.5	54	30	29.4	51	35
4	8	29.5	41.8	35.4	26.3	54	30	29.2	50.8	34.7
	13	29.4	41.5	35.1	26.1	53.8	29.5	29.1	50.3	34.1
	18	29	41	34.4	25.8	53.4	28.4	28.8	49.5	33.4
5	8	28.8	40.8	34.2	25.6	53.2	28.3	28.6	49.3	33.2
	13	28.5	40.6	33.8	25.4	53	28	28.4	49	32.9
	18	28.1	40.2	33	25	52.5	27.4	28	48.5	32.5
6	8	28	40.1	32.8	25	52.2	27.3	28	48.3	32.4
	13	27.9	40	32.5	24.9	52	27.2	27.9	48.2	32.3
	18	27.6	39.8	32.3	24.7	51.7	26.9	27.6	48	32
7	8	27.5	39.7	32.3	24.6	51.6	26.8	27.5	48	32
	13	27.4	39.6	32.1	24.6	51.3	26.7	27.3	48	31.9
	18	27.1	39.4	31.7	24.5	50.9	26.5	27	47.8	31.7

WEIGHT RANGE	14.00 - 15.99 (g)									
SPECIMEN		22			23			24		
DAY	HRS	W	H	D	W	H	D	W	H	D
1	8	36.3	45.7	39	37.6	56.2	40.5	40.1	55.9	40.4
	13	35	45.3	39	36.5	55.7	40.3	39.5	55.5	40.3
	18	34.7	44.7	39	35.9	55.1	40	38.3	55	40
2	8	34.5	44.5	38.7	35.7	54.8	39.6	38.1	55	39.5
	13	34.3	44.2	38.2	35.5	54.6	39.2	37.9	54.3	39
	18	33.8	43.8	37.5	35	54.1	38.4	37.4	53.1	38.2
3	8	33.5	43.5	37	35	53.7	38.1	37	53	38
	13	33.4	43	36.7	34.8	53.1	37.7	36.8	52.8	37.9
	18	33	42.3	36.2	34.2	52.2	37	36.1	52.5	37.6
4	8	32.8	42	35.7	34	52	36.8	36	52.2	37.4
	13	32.5	41.7	35.2	33.9	51.7	36.5	35.8	51.8	36.8
	18	32	41.2	34.6	33.6	51.2	36	35.5	51.2	36
5	8	32	41	34.4	33.3	50.8	35.7	35.1	51	36
	13	31.7	40.7	34.1	33	50.2	35.1	34.9	49.8	35.8
	18	31.1	40.2	33.7	32.4	49.1	34.3	34.4	49.1	35.4
6	8	31	40	33.6	32.3	49	34	34.3	49	35.3
	13	30.9	39.9	33.4	32.3	48.9	33.9	34.2	48.9	35.2
	18	30.5	39.7	33.2	32	48.7	33.6	34	48.7	35
7	8	30.4	39.6	33.1	32	48.6	33.6	34	48.5	35
	13	30.3	39.4	33	31.9	48.4	33.4	33.8	48.3	34.8
	18	30	39	32.8	31.6	48	33	33.4	48	34.6

APPENDIX F

EXPERIMENTAL DATA FOR CARROT

TABLE F1 EVAPORATIVE COOLING CONDITION BY WEIGHT (g)

WEIGHT RANGE		30g-50g								
SPECIMEN		1			2			3		
DAY	HRS	W	H	D	W	H	D	W	H	D
1	8	49.66	130	130	48.59	162	23.4	34.89	94.3	22.5
	13	49.39	130	130	48.35	162	23.4	34.65	94.3	22.5
	18	49.37	130	130	47.86	162	23.4	34.17	94.3	22.5
2	8	49.36	130	130	47.85	162	23.4	34.76	94.3	22.5
	13	49.15	130	130	47.54	162	23.4	34.74	94.3	22.5
	18	48.53	130	130	46.91	162	23.4	34.7	94.3	22.5
3	8	48.41	130	130	46.64	162	23.4	34.68	94.3	22.5
	13	48.16	129.8	129.8	46.2	162	23.4	34.4	94.3	22.5
	18	47.78	129.1	129.1	45.43	162	23.4	34.1	94.3	22.4
4	8	47.78	129.1	129.1	45.43	162	23.2	34.1	94.3	22.4
	13	47.46	129.1	129.1	45.2	162	23.2	33.98	94.3	22.4
	18	46.94	129.1	129.1	44.69	162	23.2	33.54	94.3	22.4
5	8	46.65	129.1	129.1	44.43	162	23.2	33.6	94.3	22.4
	13	46.23	128.9	128.9	44.21	158.4	23.2	33.52	94.1	22.4
	18	45.86	127.6	127.6	43.57	153.9	23	33.14	93.8	22.2
6	8	45.68	127.6	127.6	43.17	153.9	23	32.96	93.8	22.2
	13	45.5	127.6	127.6	43	153.9	23	32.84	93.8	22.2
	18	44.29	126	126	42.01	151.7	22.7	32.3	92.6	22.2
7	8	43.94	125.4	125.4	41.56	150.8	22.3	32.2	92.4	22.2
	13	43.72	125.4	125.4	41.16	150.2	22.3	32.05	92.4	22.2
	18	42.46	124	124	43.2	149.9	22.3	33.56	92.4	21.7

WEIGHT RANGE		70g-90g								
SPECIMEN		4			5			6		
DAY	HRS	W	H	D	W	H	D	W	H	D
1	8	73.9	149.9	30.1	71.2	149.6	26.9	72.36	127.6	31.6
	13	73.57	149.9	30.1	71.17	149.6	26.9	72.27	127.6	31.6
	18	72.92	149.9	30.1	71.12	149.6	26.9	72.09	127.6	31.6
2	8	72.88	149.9	30.1	71.46	149.6	26.9	71.83	127.5	31.6
	13	72.72	149.3	29.8	71.44	148.8	26.9	71.65	127.1	31.6
	18	72.41	147.4	28.7	71.39	147.3	26.9	71.29	126.4	31.6
3	8	72.17	149	28.7	71.34	149.6	26.9	71.02	126	31.6
	13	72.02	148.7	28.7	71.1	148.7	26.9	70.1	126	31.5
	18	70.71	147.3	28.7	70.17	147	26.9	70.74	125.4	31.1
4	8	70.91	147.3	28.7	70.17	147	26.9	70.74	125.4	31.1
	13	70.9	147.3	28.7	70.1	147	26.9	70.61	125.4	31.1
	18	70.87	147.3	28.7	68.93	147	26.9	70.37	125.4	31.1
5	8	70.37	147.3	28.7	68.89	147	26.9	69.94	125.4	31
	13	70.21	147	28.7	68.87	147	26.9	69.86	125.4	31
	18	68.95	146.8	28.4	68.77	146.5	26.5	69.43	125.3	30.8
6	8	68.49	146.8	27.9	68.33	146.5	26.8	69.37	125.3	30.8
	13	68.1	146.8	27.9	68.31	146.5	26.8	69.26	125.3	30.8
	18	66.77	145	27.7	68.09	146.1	26.7	67.91	125.1	30.8
7	8	66.94	144.8	27.5	67.61	145.5	26.2	67.3	124.1	30.4
	13	66.82	144.8	27.2	67.15	145.5	26.2	67.1	124.1	30.4
	18	66.32	143.7	26.2	66.54	145.2	26.2	69.47	124.1	30.4

WEIGHT RANGE	160g-180g									
SPECIMEN		7			8			9		
DAY	HRS	W	H	D	W	H	D	W	H	D
1	8	196.94	203	34.7	168.59	186.5	43.4	169.72	179	44
	13	196.78	203	34.7	168.5	186.5	43.4	169.41	179	44
	18	196.46	203	34.7	168.32	186.5	43.4	168.8	179	44
2	8	195.77	203	34.6	167.48	186.5	43.4	167.47	179	44
	13	189.65	202.9	34.5	166.1	184.2	43.4	167.08	178.5	44
	18	177.41	200.16	34	166.03	180.4	43.4	166.3	178.5	43.1
3	8	174.35	200.15	34	165.46	180	43.3	166.61	178.5	43.8
	13	173.9	200.13	34	164.3	180	43.3	166.54	178.5	43.8
	18	172.15	200.09	33.7	162.65	180	43.2	166.24	178.5	43.8
4	8	172.15	200.7	33.7	162.65	180	43.2	166.24	178.5	43.8
	13	171.53	200.7	33.7	162.15	180	43.2	165.44	178.5	43.8
	18	168.94	200.5	33.6	160.57	180	43.2	163.02	178.5	43.8
5	8	168.21	200.5	33.6	159.87	180	43.2	162.07	178.5	43.2
	13	167.44	200.5	33.6	159.8	180	43.2	161.54	178.5	43.2
	18	165.3	200.2	33.5	158.27	178.4	42.8	159.81	177.2	43
6	8	164.69	200.2	33.5	157.67	178.4	42.8	159.3	177.2	43
	13	164.5	200.2	33.5	156.21	177.2	42.8	159	177.2	43
	18	162.32	198.5	33.5	153.83	171.6	42.1	157.51	176.3	43
7	8	161.52	195.6	33.2	153.03	171.6	42	156.63	176.1	42.6
	13	161.09	195.4	33.2	152.49	171.6	42	156.21	176.1	42.6
	18	163.49	192.4	33.2	155.57	171.6	42	158.27	175.9	42.6

WEIGHT RANGE	30g-50g									
SPECIMEN		10			11			12		
DAY	HRS	W	H	D	W	H	D	W	H	D
1	8	33.85	129.6	21.9	40.05	162	23.4	23.4	23.4	22.5
	13	32.98	129.6	21.9	39.06	162	23.4	23.4	23.4	22.5
	18	31.25	129.6	21.9	36.98	162	23.4	23.4	23.4	22.5
2	8	29.3	129.6	21.7	34.97	162	23.4	23.4	23.4	22.5
	13	28.54	124.5	21.7	33.93	162	23.4	23.4	23.4	22.5
	18	27.01	116.9	20.3	31.86	162	23.4	23.4	23.4	22.5
3	8	25.36	107.3	19.5	30.78	162	23.4	23.4	23.4	22.5
	13	24.92	105.4	19.1	29.63	162	23.4	23.4	23.4	22.5
	18	23.87	100.8	18.7	27.94	162	23.4	23.4	23.4	22.4
4	8	21.81	100.8	18.7	26.88	162	23.2	23.2	23.2	22.4
	13	21.22	99.47	18.7	26.1	162	23.2	23.2	23.2	22.4
	18	19.64	96.3	18.3	24.12	162	23.2	23.2	23.2	22.4
5	8	19.04	96.2	18.3	23.39	162	23.2	23.2	23.2	22.4
	13	19	95.22	18.3	23.1	158.4	23.2	23.2	23.2	22.4
	18	16.4	91.1	16.8	20.18	153.9	23	23	23	22.2
6	8	15.71	89.4	16	19.34	153.9	23	23	23	22.2
	13	15.59	87.2	16	19.1	153.9	23	23	23	22.2
	18	13.78	84.3	15	17.23	151.7	22.7	22.7	22.7	22.2
7	8	13.7	84.2	15	17.22	150.8	22.3	22.3	22.3	22.2
	13	13.7	84.2	15	17.22	150.2	22.3	22.3	22.3	22.2
	18	13.7	84.2	15	17.21	149.9	22.3	22.3	22.3	21.7

TABLE F2 AMBIENT CONDITION

WEIGHT RANGE	70g-90g									
SPECIMEN		11			12			13		
DAY	HRS	W	H	D	W	H	D	W	H	D
1	8	73.9	140	30.2	81.02	150.7	29.8	84	162	34
	13	73.57	140	30.2	78.89	150.7	29.8	82.1	162	34
	18	72.92	140	30.2	74.64	150.7	29.8	79.6	161.8	33.1
2	8	72.88	140	29.4	73.54	150.6	29.6	79.2	160.1	32.7
	13	72.72	137.2	29.1	71.26	147.2	28.8	77.9	158	32
	18	72.41	131.5	28.2	66.71	143.9	27	73.1	157	30.8
3	8	72.17	129	27.4	64.28	142	26.8	71.3	156	30.6
	13	72.02	127.5	27.4	62.42	139.9	26.7	69	156	30.5
	18	70.71	123.4	26.4	57.2	135.5	25	64.2	152	29.1
4	8	70.91	123.4	26.4	54.35	135.5	25	61.7	151	29.1
	13	70.9	122.1	26.03	52.42	132.9	24.6	59.3	148	28.5
	18	70.87	118.6	24.4	47.22	128.3	23.3	54.7	143	27.3
5	8	70.37	118.6	24.2	46.02	128.3	23.3	53.2	142	27
	13	70.21	118.2	24.2	45.29	126.4	23.3	52.1	141.3	26.5
	18	68.95	115.7	24	39.9	121.9	21.9	47.2	136.1	25.8
6	8	68.49	114	23.4	38.54	120.1	21.6	45.1	134.4	25.1
	13	68.1	113.9	22.6	37.27	118.2	20.9	44	133.2	24.3
	18	66.77	112.5	20.7	34.01	116.4	19.6	40.1	131.9	22.67
7	8	66.94	112	19.8	34.01	116	19.2	39.3	131.7	22.5
	13	66.82	112	19.8	34	116	19.2	39	131.6	22.5
	18	66.32	112	19.8	34	116	19.2	38.7	131.5	22.3

WEIGHT RANGE	160g-180g									
SPECIMEN		16			17			18		
DAY	HRS	W	H	D	W	H	D	W	H	D
1	8	179.86	189	39	180.16	173.5	43.5	160.03	161.5	39
	13	176.25	189	39	177.19	173.5	43.5	157.23	161.5	39
	18	169.03	189	39	171.24	173.5	43.5	151.63	165.5	39
2	8	168.43	189	38.9	169.36	173.4	43.3	149.32	162	38.7
	13	162.08	186.5	37.9	165.4	169.2	42.6	145.9	159.6	38.2
	18	149.39	182.7	36.8	157.49	165	39	139.07	154.6	37.9
3	8	146.86	179	35.1	153.86	164	38.1	153.7	153.7	36.4
	13	141.98	179	34.6	148.44	163.6	37.6	152.31	152.2	36.1
	18	132.96	178	32.7	139.9	160	36.8	149.8	149.8	34.6
4	8	131.95	178	32.7	139.55	160	36.8	121	149.8	34.6
	13	128.46	177.2	32.7	137.55	159.2	36.8	118.51	147.9	34.4
	18	121.3	174.3	31.1	128.29	156	36.3	111	144.4	33.2
5	8	119.02	174.2	30.1	125.98	156	36.2	109.16	144.3	32
	13	116.29	173.1	30.1	122.47	155.21	35.9	107.43	143.1	32
	18	107.09	169.8	29	114.84	152.6	33.3	99.39	139.3	31
6	8	104.14	166.9	27.7	111.96	150.5	32.3	96.86	138.7	30.6
	13	102.22	165.3	27.6	110.43	148.3	31.8	94.48	138.2	30.6
	18	94.81	162.4	27	102.49	145.8	30.6	88.78	136.1	29
7	8	94.8	162.1	27	102.49	145.4	30.4	88.77	135.2	28.2
	13	94.8	162.1	27	102.47	145.4	30.4	88.76	135.2	28.2
	18	94.79	162.1	27	102.47	145.4	30.4	88.76	135.2	28.2

W=WEIGHT(g),

H= HEIGHT(mm)

D= DIAMETER(mm)

APPENDIX G

EVAPORATIVE COOLER DESIGN

3.1.1 Cabinet Design

One of the important components of the evaporative cooling system is the storage chamber, which houses the insulating materials. The resistance that a wall or a material offers to the flow of heat is inversely proportional to the ability of the wall or material to transmit heat, that is, the overall thermal resistance is inversely proportional to the overall heat transfer coefficient Equation (1). The thermal resistance of the wall is the sum of the thermal resistances of the individual materials in the wall configuration. The summation of these resistances is given in Equation (2).

$\mu = 1/\sum R$ ---------- (1)

And, $\sum R = R_i + R_I + R_O$ ---------- (2)

Where: $\sum R$ = Thermal resistance, $m^2/k/W$

μ = overall heat transfer coefficient, $W/m^2/K$

R_i = inside surface resistance, m^2K/W

R_I = Polystyrene foam resistance, m^2K/W

R_O = Outside surface resistance, m^2K/W.

For polystyrene foam, thermal resistance = $1.366m^2K/W$

For galvanized sheet metal resistance = $0.188m^2K/W$.

Source: ASHRAE handbook (2002).

From equation (2),

$\sum R = R_i + R_I + R_O = 0.188 + 1.366 + 0.188 = 1.602m^2K/W$.

From equation (1),

$\mu = 1/\sum R = 1/1.602 = 0.624W/m^2K$.

3.1.1.1 Determination of Temperature gradient across the Insulating Materials

In the design, the average ambient temperature was measured to be 32°C while the expected storage temperature is to be maintained at 22°C. The temperature gradient across the insulating materials was determined using Equation (3):

$Q_{HL} = (t_o - t_3)/\sum R$ ---------- (3.3)

Where: Q_{HL} = Heat loss per unit area of the system.

$t_o = 32^OC$.

$t_3 = 22^OC$

$\sum R = 1.602 m^2K/W$

Thus,

$Q_{HL} = (32 - 22) /1.602 = 10/1.602$

$= 6.242 W/m^2$.

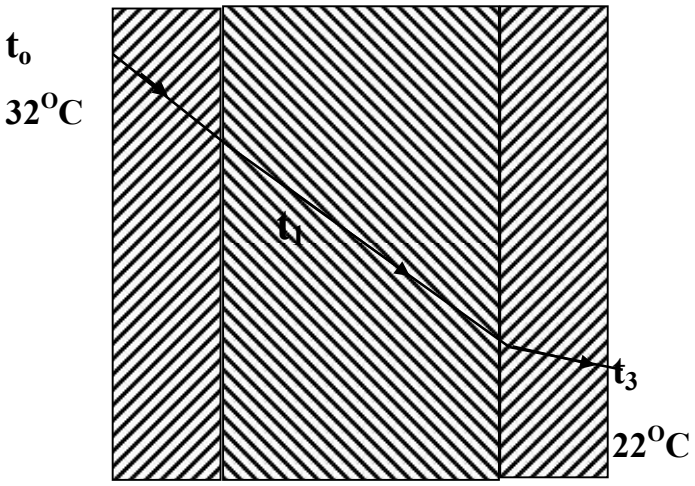

Heat transfer analysis

FAN SELECTION

Fan is selected using the required airflow.

Fan Selection Flowchart

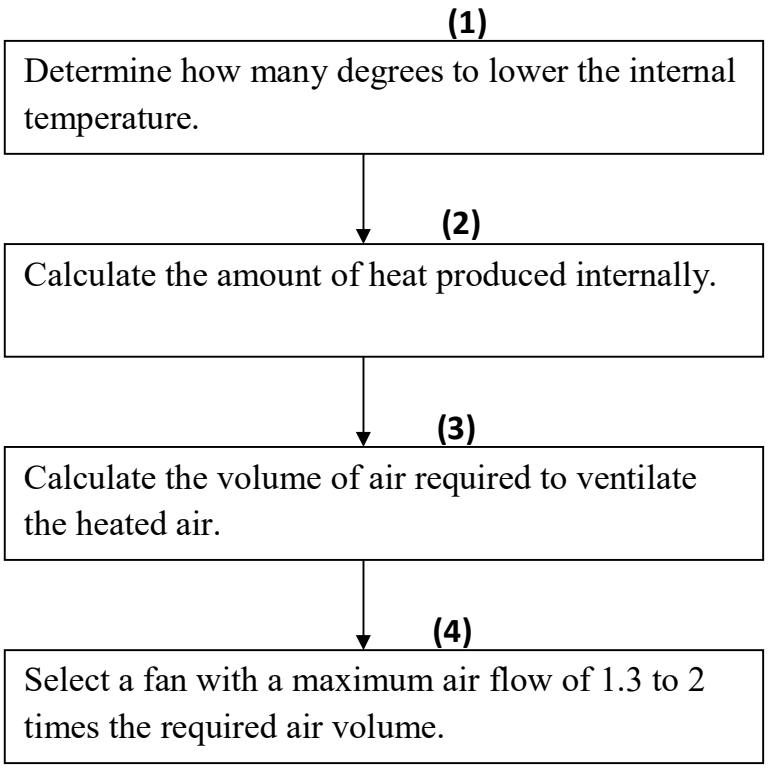

Source: AFC, 2009.

PROCEDURE:

1. **Mean ambient temperature** = 32^0C.

   Designed mean cooler temperature = 22^oC.

Degree to lower the internal temperature = $32^0C - 22^0C = 10^0C$.

2. Amount of Heat Produced Internally

Design Parameters:

Storage size = 0.59 x 0.38 x $0.25m^3$.

Insulation thickness = 0.05m.

Volume = $0.056m^3$.

Inside dimensions = 0.54 x 0.33 x 0.20m = $0.036m^3$.

External store surface area = $1.69m^2$.

a) Heat Gain by Conduction

$Q_C = KAdT/dt$

Conductivity of polystyrene = 0.033Kcal/hr/m/^OC

Temperature difference between ambient and store = $10\ ^OC$.

Thickness of polystyrene = 0.05m

Surface area of store = $1.69m^2$.

Heat transfer by conduction, $Q_C = KAdT/dt = (0.033 \times 1.69 \times 10)/0.05$

= 11.154W

b) Respiratory Heat Load

Weight of stored produce (okra) = 15kg = 0.015tons

From table L3.90 in appendix H, the rate of evolution of heat by okra at $22^{O}C$ is 57,400btu/ton/day

= 14,465Kcal/ton/day.

Note: the average value of respiration rate from table L3.9 was used for the calculation

Respiratory activity of okra, (Q_r)

$Q_r = M_p \times P_r$

Where: Q_r = respiration heat

M_p = mass of produce, kg.

P_r = rate of respiration heat production, W/kghr.

$Q_r = (0.015 \times 14465) /24hrs = 9.04kcal/hr = 10.5Watts.$

c) Field Heat of the Produce

This is expressed as:

$Q_f = (M_pC_p)\Delta T /t_c$

Where: Q_f = field heat picked up by produce, W.

C_p =specific heat capacity of produce, $kJ/kg^{O}C$.

t_c = cooling time in seconds. For fruits, it is equal to 12hrs (FAO/SIDA, 1986).

C_P for okra = $3.85Kj/kg^{O}C$ (Robinson et al, 1975).

Amount of field heat for Okra,

Q_f = 15 x 3.85 (32 – 22) / 12 x 3600

= 13.4Watts.

Therefore, $Q_{Total} = (Q_c + Q_r + Q_f) = (11.15 + 10.5 + 13.4)$

= 35.05Watts.

3. Volume of Air Needed to Ventilate the heated Air

RequiredAirflow, $V = Q_T/(\rho \times C_p \times \Delta T)$

Where: V = required airflow, m^3/s.

Q = Heat generated, W.

ρ = density of air ($1.1kg/m^3$).

C_p = specific heat capacity of air, approx. $1000J/kg^OC$.

Therefore,

$V = 35.05 / 1.1 \times 1000 \times 10 = 3.19 \times 10^{-3} m^3/s = 0.19\ m^3/min.$

4. Selecting a Fan

From the above, the fan to be selected will be that with a maximum airflow twice that of the required airflow in step (3).

Therefore, a fan with a maximum flow rate of 2 x 0.19 m^3/min =

0.38 m^3/min will be selected.

In the design, 10 DC fans each having a flow rate of 0.04 m^3/min were used.

APPENDIX H

APPENDIX H CONT.

Design and development of an evaporative cooling system for fresh fruit and vegetable storage. By Okafor, V. C.is licensed under a Creative Commons Attribution-NonCommercial-NoDerivatives 4.0 International License.