PREDICTION OF COMPRESSIVE STRENGTH OF SAW DUST ASH-CEMENT CONCRETE USING ARTIFICIAL NEURAL NETWORK METHOD

BY

CHUKWUEMEKA OPARA (B.ENG)
(REG NO: 20054551908)

A THESIS SUBMITTED TO THE POSTGRADUATE SCHOOL FEDERAL UNIVERSITY OF TECHNOLOGY OWERRI

IN PARTIAL FULFILLMENT OF THE REQUIREMENTS FOR THE AWARD OF DEGREE OF MASTER OF ENGINEERING (M.ENG) IN CIVIL ENGINEERING (STRUCTURAL ENGINEERING OPTION)

SEPTEMBER, 2016

CERTIFICATION

This is to certify that this work "**Prediction of Compressive Strength of Saw Dust Ash Cement Concrete Using Artificial Neural Network Method**" was carried out by **Chukwuemeka Opara (Reg. No. 20054551908)** in partial fulfillment for the award of the degree of Master of Engineering (M.Eng) in Civil Engineering (Structures) of the Federal University of Technology, Owerri.

Engr.Dr. D .O. Onwuka
Principal Supervisor

15/09/2016
Date

Engr. Dr. (Mrs). C. E. Okere
Co-Supervisor

15-09-2016
Date

Engr. Prof. J.C.Ezeh
Head of Department

15/09/2016
Date

Engr. Prof. G.I. Nwadikom
Dean, SEET

15/09/16
Date

Prof. Mrs. Nnenna. N. Oti
Dean, School of Postgraduate Studies

Date

Engr. Prof. O.O. Ugwu
External Examiner

15/9/16
Date

DEDICATION

This Project work is dedicated to the Almighty God who by his infinite mercy make this project a reality.

ACKNOWLEDGEMENTS

My heartfelt gratitude goes to my supervisor, Dr. D. O. Onwuka for initiating and supervising this research work. May God bless him in abundance for all his encouragement and assistance. I also want to appreciate Engr. Dr. C. E. Okere for her contributions during this research work. My appreciation also goes to Engr. Dr. B. C. Okoro and Engr. Dr (Mrs.) B .U. Dike for their advice, may the Almighty God enlarge their coasts in Jesus name…Amen!

My sincere thanks go to the Dean of School of Engineering and Engineering Technology, FUTO, Engr. Prof. G.I. Nwandikom for his encouragements and Engr.Dr.M.S.Nwakaudu for his contributions. May God bless them in abundance.

I wish to thank the able Head of Department of Civil Engineering, FUTO, Engr Prof. J. C. Ezeh , and my course lecturers, Late Rev. Engr. Prof. N. N. Osadebe. May his gentle soul rest in peace,…Amen! My sincere thanks also go to Engr. Prof. A. U. Elinwa ,for preparing enabling environment for this research work. My gratitude also goes to the following staff of the Department of Civil Engineering, Federal University of Technology, Owerri: Engr. Dr. L. O. Ettu, Engr. Dr. O. M. Ibearugbulem, Engr. Dr. L. Anyaogu, Engr.Dr.U.C.Anya, Engr. Dr. N. L. Nwakwasi, Engr. Dr. J. C. Osuagwu, Engr. Dr. H. U. Nwoke, Engr. A .N. Nwachukwu, Engr. F. C. Njoku, Engr. S. I. Agbo, Engr.(Mrs.) C. T. Awodiji and Engr.Dr. (Mrs.) J. I. Arimanwa. They contributed in one way or the other to the success of this research work. May the Almighty God grant them their heart desires. My profound gratitude goes to my friend, Engr. Cyril Nwosu for his encouragement. I will not fail to thank my sweet heart, Engr. (Mrs.) Oge Queen Opara, who stood by me during the time of this research. May the Almighty God grant her long life and prosperity.

Above all, I am very grateful to the Almighty God who made this research work a success. He provided strength and wisdom for this work to be completed. May all glory, honour and adoration be ascribed to His Holy Name…. Amen!

TABLE OF CONTENTS

LIST OF TABLES

LIST OF FIGURES

ABSTRACT

This research work focused on the Prediction of Compressive strength of Saw dust Ash-Cement concrete using Artificial Neural Network method. Neural Networks offer a number of advantages including requiring less formal statistical training, ability to implicitly detect complex non-linear relationship between dependent and independent variables, ability to detect all possible interactions between predictor's variables, and availability of multiple training algorithms. A 5-20-1 network architecture was created. In all, a total of five hundred (500) data were selected and used in this work. Out of this number; three hundred and fifty (350) were used for training the network, seventy five (75) for validation and seventy (75) for testing the network. After training the network, the output and targets have an R - value of 0.97868 which greater than 0.9. This shows that the data used for training the network, have a good fit. The results obtained from the network are approximately the same as that obtained experimentally. The percentage error of the experimental results with respect to the network predicted results, ranges from 0.000 to 0.4145% which is very insignificant. The network was tested for adequacy at 0.05 significant levels using statistical student`s T-test, and it was found to be adequate. With the trained network, compressive strength of saw dust ash- cement concrete can be predicted from known mix ratios and vice-versa. Some problems often associated with the network which include prone to overfitting and overtraining, the 'black box nature` of the network, greater computational burden, and empirical nature of the model development were taken care of by the validation checks.

Key words: Prediction, Neural network, Compressive strength, Mix ratio, Sawdust Ash, Concrete.

CHAPTER ONE
INTRODUCTION

1.1 Background of Study

Concrete is the most common building material in the world. It is a composite material primarily composed of aggregates (fine and coarse), cement and water. Cement is one of the major constituents of concrete used in construction of many civil engineering projects such as housing units, rigid pavements, gravity dams etc. In the last century, the escalation in construction projects has led to an increase in the use of concrete. This demand is estimated to double in the next thirty years (Onwuka et al, 2013).

Among the basic constituent of concrete, cement is the most expensive, thus, the major determinant factor in the cost of producing concrete is cement. Due to the fact that concrete is one of the most used man-made material in the world, its demands has been on the increase despite its high cost.

The rapid increase in the cost of ordinary Portland cement may be attributed to high cost of importation of cement into the country. It is pertinent to note that Civil engineering practice and construction works in Nigeria depend to a very large extent on concrete. Concrete is one of the major building materials that can be delivered to the job site in a plastic state and can be molded in-situ or precast to virtually any form or shape. Its basic constituents are cement, fine aggregate (sand), coarse aggregate (granite chippings) and water. Hence, the overall cost of concrete production depends largely on the availability of the constituents. In Nigeria, a bag of cement is sold at almost uniform price with slight deviations in every state of the federation. However, due to variation in the cost of aggregate in various states, the cost of concrete varies from state to state.

In developing countries like Nigeria, the high costs of procuring concrete materials for construction works have over the years constrained the users to compromise quality (Anyaogu and Ezeh, 2013). This has resulted in poor performance of infrastructure in service; a major factor that has contributed to the increase in maintenance costs and the series of collapsed structures with attendant loss of lives and properties. For some time now, the Nigerian government has been clamoring for the use of local materials in the construction industry to limit costs of construction. The high cost of conventional building materials is a major factor affecting housing delivery in Nigeria and other developing countries (Onwuka et al, 2013). This has necessitated research into alternative materials of construction. There has therefore been a greater call for the sourcing and development of alternative, non conventional local construction materials.

There were many experimental work conducted to improve the properties of the concrete by putting new materials, whether it is natural materials or recycled materials or synthetic materials in the concrete mix. The additional material can be obtained by replacing the cement, or just as additive, and one form of the additive is natural material in form of large amount of industrial and agricultural wastes which are disposed in most areas in Nigeria especially in towns like Nsukka, Abakiliki and Egbema. If these wastes cannot be disposed properly, they will lead to social and environmental problems. There is an increasing interest in what happens to products at the end of their useful lives, so natural materials have an advantage in that they can biodegrade or are burnt in a carbon-neutral manner. Natural materials like sawdust are not commonly used in the construction industry but still are often dumped as industrial wastes. However, with the quest for affordable housing system for both the rural

and urban population of Nigeria and other developing countries, various proposals focus on cutting down conventional building material costs

Given the consequences of rapid rise in the cost of ordinary Portland cement, there is need to develop cheap and replaceable or supplementary substitutes for ordinary Portland cement. This research work is aimed at using recycled industrial waste product to serve as a supplementary cementitious material that can replace or substitute cement.

It is important to note that the properties of concrete can be varied by the relative proportions of cement, aggregates and water mixed together both in fresh and hardened state. The supplementary cementitious material or a combination of chemical admixtures which can be used to produce high performance concrete (concrete with improved properties) now makes the mixture a five component mix, for the purpose this research work the fifth component is saw dust ash-cement.

For this research work the components of concrete are cement, sawdust ash, fine aggregate (sand), coarse aggregate (granite) and water. In this work, a mathematical model for the optimization of Compressive Strength of concrete is developed with different percentages of sawdust ash as partial replacement of cement. This involves testing concrete from the different mix ratios where cement is partially replaced with sawdust ash. The results were used in training and validating of the Neural Network which can predict mix ratios given a particular compressive strength of concrete and vice versa. As the number of components increase cost per m^3 increase, making optimization of concrete mixtures necessary so as to obtain concrete with required and suitable properties at minimum cost.

Methods of optimization of compressive strength of concrete can either be empirical/regression method or artificial intelligence/ soft computing

method. Examples of regression methods are Scheffe's method of optimization, Osadebe's regression model etc., while examples of artificial intelligence/ soft computing methods are Artificial Neural Network method, Fuzzy Logic method, Genetic Algorithm method , etc.

The method of optimization used in this work is one of the soft computing techniques called Artificial Neural Network method. This method is preferred to regression models like Osadebe Regression Model and Scheffe's method of optimization because it is able to construct a supposedly complex relationship between the input and output variables with an excellent level of accuracy. This method is highly non-linear and can capture complex interactions among input/output variables in a system without any prior knowledge about the nature of these interactions. The main advantage is that one does not have to explicitly assume a model form which is a prerequisite in the parametric approach. In comparison to parametric methods, in ANNs a relationship of possibly complicated shape between input and output variables is generated by data points themselves. In comparison to parametric methods, ANNs tolerate relatively imprecise or incomplete data, approximate results, and are less vulnerable to outliers. Thus, in ANNs, independent operations can be executed simultaneously.

1.2 Statement of Problem

Civil engineering practice and construction works in Nigeria depend to a very large extent on concrete. Concrete is one of the major building materials that can be delivered to the job site in a plastic state and can be molded in-situ or precast to virtually any form or shape. Its basic constituents are cement, fine aggregate (sand), coarse aggregate (granite chippings) and water. Hence, the overall cost of concrete production

depends largely on the availability of the constituents. It has been observed that in recent times that the major hindrance to realizing good structures and shelter for mankind can be attributed to high cost of building materials. Among these, cement is one of the basic building and construction material. It is one of the most expensive construction materials which had been contributing to unaffordable housing for Nigerians and other third world countries.

As stated earlier, there is excessive demand on cement which is the major binder in concrete. Moreover, the quantity needed for a standard mix is quite much and cement is not only used in residential building, but also in gravity dams, rigid pavement etc .Consequently, its increasing cost due to inflation and changes in market forces has discouraged many Nigerians from embarking on housing projects and has caused them to spend more than the initial estimated cost of projects. Despite this distressful circumstance, little or no effort has been made to produce low-cost sustainable housing unit in rural areas of the country. Development of supplementary cementitious material for Ordinary Portland Cement is a major step in reducing the cost of producing concrete. Effective utilization of sawdust from wood (saw-mills) will reduce the demands on cement and, invariably, the cost of production of concrete will drastically reduced to minimal.

However, addition of sawdust ash as stated before increases the component of concrete from four to five. This makes the orthodox method of mix design, which is used in predicting the properties of concrete such as compressive strength more tedious leading to computational complexity. The problem of identifying optimum concrete mix becomes very complicated and extremely complex. This is in agreement with the

statement credited to Ippei et al, (2000), which stated thus: "this proportion problem is classified as a multi criteria optimization problem and it is of vital importance to formulate a way to solve the multi criteria optimization problem. Using the orthodox method of developing mix designs will require carrying out several trials on various mix proportion in the laboratories making even more difficult to identify optimum concrete mix". With the use of the ANN method, it would be easier to predict the compressive strength of Sawdust Ash-Cement concrete given any mix ratio and vice versa.

Past studies revealed that regression method of optimization is incapable of handling complex data. Thus, in this work one of the artificial intelligence methods of optimization that can predict results accurately from complex data would be employed. The method is Artificial Neural Network method.

1.3 Objectives of Study

The main objective of this study is Prediction of Compressive Strength of Sawdust Ash -Cement Concrete Using Neural Network Method while its specific objectives are as follows:

(i) To investigate neural network models for predicting the compressive strength of sawdust ash-cement concrete

(ii) To carry out parametric study using the trained network in order to obtain the significance of each parameter affecting the compressive strength of sawdust ash-cement concrete.

(iii) To test, the adequacy of the neural network model using student's t-test

(iv) To compare the predicted compressive strength of sawdust ash-cement concrete obtained using neural network method with those obtained experimentally.

1.4 Justification of Study

Concrete is a four component construction material. The partial replacement of cement with sawdust ash increases the components to five. As number of constituents of concrete increases, a proportioning problem arises, which makes it difficult to determine the possible combinations of concrete ingredients that will satisfy all specified or desired criteria, particularly compressive strength and cost of production. The trial test method of mix proportioning is cumbersome, time consuming and expensive.

The use of Scheffe's and Osadebe's modeling method has also proved to be very complex when the number of components increases. Therefore, Artificial Neural Network is used in this research work to develop a model for the prediction of the SDA-Cement concrete.

The use of the neural network based model gives the following benefits

(i) The cost of using concrete in housing unit and other construction projects in Nigeria will be reduced.

(ii) Waste materials, especially industrial wastes like as sawdust ash can be used as a good raw material for partial replacement of cement in construction works.

(iii) Proportioning five components of concrete mix involving use of sawdust ash for partial replacement of cement using Artificial Neural Network method can be done with ease

(iv) The prediction of compressive strength of sawdust ash- cement concrete using neural network method will be much easier.

(v)It will encourage engineers and researchers on the use of artificial intelligence methods in solving structural engineering problems that involve the use of complex data.

1.5 Scope of Study

There are so many alternative materials such as fly ash, blast furnace slag, palm bunch ash, silica fumes etc. that can be used as partial replacement of cement in the production of concrete. The scope of this work is limited to the use of Sawdust Ash as a partial replacement of cement.

Also, the only property of SDA-Cement concrete considered in this work is the compressive strength.

Although there are different methods available for the prediction of the compressive strength of SDA-Cement Concrete, the work concentrated on the use of the Artificial Neural Network in the prediction of the compressive strength of SDA-Cement Concrete.

CHAPTER TWO
LITERATURE REVIEW

2.1 Concrete

Concrete is the basic engineering material used in most of the civil engineering structures. Its popularity as basic building material in construction is because of its economy of use, good durability and ease with which it can be manufactured at site. The ability to mould it into any shape and size is because of its plasticity in green state and its subsequent hardening to achieve strength is particularly useful.

Khurmi *et al* (2006) defined concrete as mixture of cement, sand, brick or stone and water which when placed in forms and allowed to cure, gets hardened like stone Bhavikatti (2001), in his own definition referred to concrete as intimate mixture of binding materials, fine aggregates, coarse aggregates and water.

Therefore, concrete in its green state is known to consist majorly of cement, aggregates (fine and coarse) and water. In order to improve the quality of the concrete, certain cementitious materials and chemical admixtures may be introduced. This mixture of cement and other components forms a composite inert material known as concrete (Oyenuga, 2003).

The key to achieving a strong, durable concrete rests in the careful preparations and mixing of the components, then through a chemical reaction called hydration, the paste hardens and gains strength to form the rock-like mass known as concrete. Within this process lies the key to a remarkable trait of concrete: it is plastic and malleable when newly mixed, strong and durable when hardened, these qualities explains why one material (concrete) can be used in diverse ways.

Etymologically, the word concrete is derived from the Latin word "coneretus" which means compact or condensed, the perfect passive participle of "conerescere" from con-(together) and crescere – (to grow).

It is viewed traditionally that is was the Romans who pioneered the use of concrete in construction. Recent studies raise the possibility that this can be traced to the Pharaohs of Egypt who may have employed concrete in the construction of the Great Pyramid, which is a good two millennia earlier than previously thought and it remains a possibility that the invention of concrete may have acted as a catalyst for the construction of the Great pyramid.

Concrete has relatively high compressive strength but much lower tensile strength; it can be widely used for making architectural structures, foundations,brick/blockwalls,pavements,bridges/overpasses,motoways/roads, runways, parking structures, dams, pools, reservoirs, etc.

Fine aggregate is one of the important constituents that affect the strength (Sharmin *et al,* 2006). The gaps coarse aggregates make are filled by the fine aggregates and the gaps made by the fine aggregates are filled by the binding materials. Concrete can be classified according to their compressive strength as follows: concrete between 16 to 50MPa is medium grade while between 51 to 100MPa is high grade and beyond 100MPa is ultra-high strength concrete. In addition, the strength of concrete mainly depends on the amount of water used, aggregate gradation, aggregate size and shapes, cement quality, mixing time, mixing ratios, curing, etc. (Kabir, 2006). Concrete must be strong and workable, a careful balance of the cement to water ratios is required when making concrete. Fine aggregate is basically extracted from the land or the marine environment. It generally consists of natural sands or crushed stones with most particles passing through a

9.5mm sieve. Though sand is the most preferred fine aggregate in use, the cost of its procurements and desire for effective maximization and preservation of the environment has spurred up researches into suitable and adequate materials, which can effectively take the place of sand in concrete. Stone powder, termite soil and quarry dust are good examples of such materials.

2.2 Concrete Constituents

Concrete is easily and readily prepared. It can be fabricated in all sorts of conceivable shapes and structural systems. Its great simplicity lies in the fact that its constituents seem to be everywhere and are readily available almost anywhere in the world for use. The constituents for concrete are proportioned and engineered to produce a concrete of specific strength and durability, so it is fit for purpose for the job for which it is intended. Concrete today is manufactured by mixing cement, water, fine and coarse aggregates with or without additives, admixture, pigments or fibres, etc.

2.2.1 Cement

According to Neville (1995), cement in the general sense of the word can be described as a material with adhesive and cohesive properties which make it capable of bonding mineral fragments into a compact whole. It is referred to as a binder and a substance that a set and harden independently.

In construction, it is restricted to the binding materials used with stones, sand, bricks, building blocks, etc. the principle constituent of this types of cement are compounds of lime.

Although only certain types of cement are commonly utilized, there are several different types of cement that are produced. Various types of

cement are possible by blending different proportions of gypsum clinker and other additives. Cements that are used for construction fall into two main categories based on cement properties: hydraulic and non-hydraulic cement.

In addition to the two main cement forms, there are several different forms of hydraulic cement. Of the many varieties of hydraulic cement, the most commonly used cement today is Portland cement.

Non-hydraulic cement was the first form of cement invented and is such that cannot harden while in contact with water as opposed to hydraulic cement which can. They are created using materials such as non-hydraulic lime and gypsum plasters. After it has been used in construction, it must be kept dry in order to gain strength and hold the structure. Due to the difficulties associated with waiting long period for setting and drying, non-hydraulic cement is rarely utilized in modern times.

Hydraulic cements are cements that have the ability to set and harden after being combined with water, as a result of chemical reactions, after hardening, hydraulic cement mixtures retain strength and stability even when in contact with water (BS 5328: Part 2: 1997). Due to the fact that hydrates are formed, when hydraulic cement is initially in contact with water, the new mixture becomes essentially insoluble in water. That gives hydraulic cement a strength and stability that makes it distinct from non-hydraulic cement, Hydraulic cement is made primarily from limestone, certain clay minerals and gypsum which are burned together in a high temperature process that drives off carbon dioxide and chemically combines the primary components into new compounds. Hydraulic cement has the ability to set and harden quickly in addition to their great relative strength

(Khurmi, et al 2006). This makes hydraulic cement the main cement utilized in modem day construction.

The use of cement is majorly seen in the production of mortar and concrete, in which the cement exercises its binding characteristics on natural or artificial aggregates to form a strong building material that can withstand normal environmental conditions.

Origin of the hydraulic mixture from the combination of hydraulic lime and pozzolan is uncertain. According to Shetty (2005), the history of cement materials is as old as the history of engineering construction. However, it has been applied through ages, from the time of the ancient Macedonians through the Roman engineers to the French and British engineers who formalized the making of the hydraulic cement in the 18th century. This paved way for the development of modern cement at the start of industrial revolution, of which Portland cement is a good example.

2.2.1.1 Portland Cement

This is the most commonly used binding material in the world and in Nigeria. it is usually referred to as Ordinary Portland Cement (OPC) and is a basic constituent of concrete and mortar. It is made primarily from calcareous material such as limestone or chalk and from alumina and silica found as clay or shale. Raw material manufacturer of Portland cement are found in nearly all countries. According to White (2001), it is a finely ground material consisting primarily of compounds of lime, silica, alumina and iron, which when mixed with water forms a paste which hardens and binds aggregates such as sand, gravel or crushed rock to form a hard overall mass called concrete. The intimate mixing together of calcareous and argillaceous or oilier silica-, alumina, and iron oxide bearing materials,

burning them at a clinking temperature and grinding the resulting clinker into fine powder yields a material which when mixed with calcium sulphate or other material is referred to as Portland cement.

According to European standard (EN 197:1), the Portland cement clinker makes up to about 90% of cement constituents together with calcium sulphate which is about 5% and forms the minor constituent. As previously stated, Portland cement is hydraulic cement, meaning that if concrete is made from this type of cement, it must be kept moist to set and harden. Gain in strength and durability of concrete is continuous for years as die reaction between water and cement is progressive.

2.2.1.2 Manufacture of Portland Cement

The process of manufacture of cement consists essentially of grinding the raw materials, mixing them intimately in certain proportions and burning in a large rotary kiln at a temperature of up to about 1450°C when the material sinters and partially fuses into halls known as clinker. The clinker is cooled and ground into a fine powder with some gypsum added and the resulting product is the commercial Portland cement so widely used throughout the world (Neville, 1995). The mixing and grinding of the raw materials can be done either in water or in dry conditions, hence the names “wet” and “dry processes. The actual methods of manufacture also depend on the hardness of the raw materials used and on their moisture content. When rock is the principal raw material, the first step after quarrying in both processes is the primary crushing. Mountains of rock are fed through crushers capable of handling pieces as large as an oil drum. The first crushing reduces the rock to a maximum size of about 6 inches. The rock then goes to secondary crushers or hammer mills to about 3 inches or smaller.

In the wet process, the raw materials properly proportioned are then ground with water, thoroughly mixed and fed into the kiln in the form of “slurry” (containing enough water to make it fluid). In the dry process, raw materials are ground, mixed and fed into the kiln in a dry state. In other respects, the two processes are essentially alike.

The raw materials are heated to a high temperature in the kiln. As the material moves through the kiln, certain elements are driven off in the form of gases. The remaining elements unite to form a new substance with new physical and chemical characteristics. This new substance called. Clinker is formed in pieces about the size of marbles.

According to Shetty (2005), the wet process (the constituent materials are mixed to form a slurry with addition of about 35-50%) remained popular for many years because of the possibility of more accurate control in the mixing of raw materials and also the techniques of intimate mixing of raw materials in powdered thin was not available. When modem technique of dry mixing of powdered materials using compressed air was developed, the dry process gained momentum (Shetty 2005). Each step in the manufacture of Portland cement is checked by frequent chemical and physical test in plant laboratories. The finished product is also analyzed and tested to ensure it complies with all specification. A schematic diagram showing the step-by-step process involved in the manufacture of Portland cement is shown fig.2.1.

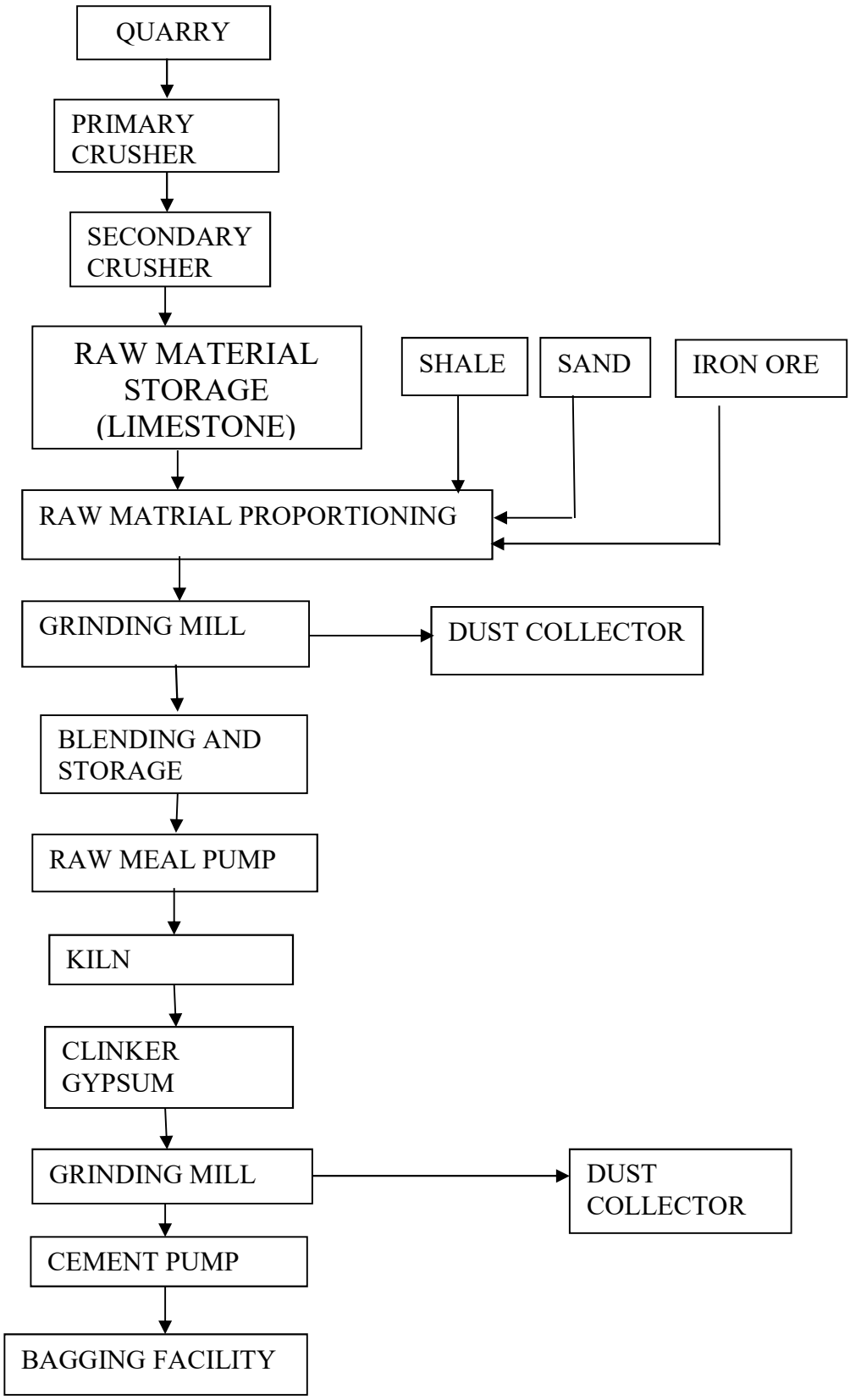

Fig. 2.1 Production steps of Portland cement

2.2.1.3 Chemical Composition of Portland Cement

The raw materials used for the manufacture of cement consist mainly of lime, silica, alumina and iron oxide (Neville, 1995). These compounds interact with one another in the kiln to form a series of more complex products and apart horn a residue of uncombined lime which has not had sufficient time to react, a state of chemical equilibrium is reached.

Shetty (2005) noted that there are four basic minerals in Portland cement grain: Tricalcium silicate (Ca_3SiO_5), dicalcium silicate (Ca_2SiO_4), tricalcium aluminate($Ca_3A1_2O_5$) and calcium aluminoferrite ($Ca_4Al_nFe_{2-n}O_7$). The formula of each of these minerals can be broken down into the basic calcium, silicon, aluminum and iron oxides. Abbreviated nomenclature based on oxides of various elements is used to indicate chemical formulas of relevant species i.e. C=CaO, S=SiO_2, A =$A1_2O_3$, F=Fe_2O_3, hence traditional cement nomenclature abbreviates each oxide as shown in Table 2.1

Table 2.1 Table showing chemical composition of Portland cement

MINERAL	CHEMICAL FORMULA	OXIDE COMPOSITION	ABBREVIATION
Tricalcium Silicate (alite)	Ca_3SiO_5	$3CaO.SiO_2$	C_3S
Dicalcium slilicate (belite)	Ca_2SiO_4	$2CaO.SiO_2$	C_2S
Tricalcium aluminate	Ca_3AlO_4	$3CaO.Al_2O_3$	C_3A
Tetracalcium Aluminoferrite	$Ca_4Al_nFe_{2-n}O_7$	$4CaO.Al_nFe_{2-n}O_3$	C_4AF

Source: Neville (1995)

The composition of cement is varied depending on the application, a typically example of cement contains 50 to 70% C_3S, 15 to 30% C2S, 5 to

10% C_3A, 5 to 15% C_4AF and 3 to 8% other additives or minerals (such as oxides of calcium and magnesium). H is the hydration of the calcium silicate, aluminate, and aluminoferrite minerals that causes the hardening and setting of cement.

The ratio of C_3S to C_2S helps to determine how fast the cement will set, with faster setting occurring with C_3S contents. Lower C_3A content promotes resistance to sulphate. Higher amounts of ferrite lead to slower dehydration. The ferite phase causes the brownish gray colour in cements so that "white cements" (i.e. those that are low in C4AF) are often used for aesthetic purposes.

It is worth noting that a given cement grain will not have the same size or even necessarily contain the same minerals as the next grain. The heterogeneity exists not only within a given particle but extends from grain to grain; batch to batch, etc. therefore, (the actual proportions of the various compounds vary considerably from cement to cement and indeed different types of cement are obtained by suitable proportioning of the raw materials. A general idea of the composition of cement can be obtained from Table 2.2 which gives the oxide composition limits of Portland cement.

Table 2.2 Table showing oxide composition of Portland cement

Oxide	Content (%)
CaO	60 – 67
SiO_2	17-25
$A1_2O_3$	3-8
Fe_2O_3	0.5-4.0
MgO	0.5-4.0
Alkalis	0.3-1.2
SO_3	2.0-3.5

Source: Neville (1995)

Two compounds which constitute also the minor compounds that influence the properties of cement to an extent, to be considered always in the chemical constituents of cement are sodium oxide (Na_2O) and potassium oxide (K_2O) (Shetty, 2005 ; Bhavikatti, 2001). They have been discovered to react with sonic aggregates, the products of the reaction causing disintegration of the concrete and they have also been found to affect the rate of the gain of strength of cement (Neville, 1995). It should therefore be noted that the term “minor compounds” refers primarily to their quantity and not necessarily to their importance.

The amount of gypsum added to clinker is crucial and it dependent on the C3A content and the alkali content of cement. Excess gypsum leads to the expansion and consequent disruption of the set cement paste.

2.2.2 Aggregates

Hydraulic cement concrete is a cement and water paste in which aggregate particles are embedded. Aggregate is granular material (such as sand, gravel, crushed stone, blast furnace slag and light weight aggregates) that usually occupies approximately 70 to 80% the volume of concrete. According to Singh (Singh, 2008), aggregates are mixed with a cementing material to produce concrete. Aggregates are very important because they give body to the concrete, reducing shrinkage and economic implications of concrete production and also impact on various characteristics and properties of concrete undoubtedly (Shetty, 2005). Therefore, because at least three quarters of the volume of concrete is occupied by aggregates, it is not surprising that its quality is of considerable importance. Not only may the aggregate limit the strength of concrete, as aggregate with undesirable

properties cannot produce strong concrete, but the properties of aggregates greatly affect the durability and structural performance of concrete.

Aggregate is much cheaper than cement and maximum economy is obtained by using as much aggregate as possible in concrete, but economy is not the only reason for using aggregate: it confers considerable technical advantages on concrete which has a higher volume stability and greater durability-than hydrated cement paste alone.

In construction, aggregate (as stated before) describes a variety of materials including gravel, sand and crushed stones. Their particles are used in their raw forms or are combined with other materials to produce concrete or asphalt. Aggregates are readily recyclable and are usually reused for new construction. An aggregate is the individual component within a material. It typically provides bulk for the material or prevents stress caused by compression. Gravel, for example is considered an aggregate of concrete. It has a specific particle size of 0.079 to 2.5 inches (2 to 64mm). Sand is another aggregate of concrete with a particle size of 0.0025 to 0.0787 inches (0.0625 to 2mm).

When combined with other materials, aggregate particles provide support for an entire structure. In concrete, gravel and sand together provide the right support when the mix hardens. The aggregate in asphalt provides a similar role.

Aggregates find their way into several applications, for example, gravel is used to pave some road types and provide support for railroad tracks. Sand is used in agriculture to grow crops and along the shore to replenish beaches that have eroded by waves. Crushed stones are another type of aggregate used in road construction.

People have used sand and stone for foundations for thousands of years. Significant refinement of the production and use of aggregate occurred during The Roman Empire, which used aggregate to build its vast network of roads and aqueducts. The invention of concrete which was essential to architectural utilizing arches, created an immediate permanent demand for construction aggregates.

The advent of modem blasting methods enabled development of quarries which are now used throughout the world, wherever competent bedrock deposits of aggregate quality exists. In many places, good limestone, granite, marble or other quality stone bedrock deposits do not exist. In these areas, natural sand and gravel are mined for use as aggregate. When neither stone nor sand and gravel are available; construction demand is usually satisfied by shipping in aggregates by rail, barge or truck. Additionally, demand for aggregates can be partially satisfied through the use of slag and recycled concrete.

Aggregates themselves can be recycled as aggregates. Unlike deposits of sand and gravel or stone suitable for crushing into aggregates, which can be anywhere and may require overburden removal and/or blasting, “deposits” of recyclable aggregate tend to be concentrated near urban areas, and production from them cannot be raised or lowered to meet demand for aggregates supply of recycled aggregates depends on physical decay of structures and their demolition. The aggregates are usually sorted out of the old buildings been demolished or concrete that has been broken down. These aggregates are recycled for building new roads of some other type of construction; (his could include housing. buildings or industrial facility. The recycled aggregate forms a part of artificial aggregates which can be used in construction.

Aggregates are not completely inert, its physical, thermal, and sometimes also chemical properties influence the performance of the concrete (Neville, 1996). Recycled aggregates are increasingly being used as partial replacements of natural aggregates, while a number of manufactured aggregates, including air-cooled blast furnace slag and bottom ash are also permitted. These aggregates should consist of particles having adequate strength and resistance to exposure conditions. They should not contain materials that have harmful effects such as dirt, coal, clay or organic matter. Aggregates of good quality should possess certain characteristics so that the resulting concrete is to be workable, strong, durable and economical. Some of the characteristics include abrasion, resistance, compressive strength, chemical stability, good particle shape and surface texture (White, 2001)

2.2.3 Water.

Water is an important ingredient of concrete as it actively participates in the chemical reaction with cement. Since it helps to form the strength giving cement gel, the quantity and quality of water is required to be looked into very carefully. A proper yard-stick to the suitability of water for mixing concrete is that, if water is fit for drinking it is fit for making concrete. This does not appear to be a true statement for all conditions, Sonic waters containing a small amount of sugar would be suitable for drinking but not for mixing concrete and conversely water suitable for making concrete may not necessarily be fit for drinking. Some specifications require that if the water is not obtained from sources that have proved satisfactory, the strength of concrete or mortar made with questionable water should be compared with similar mortar or concrete made with pure water. Some specification also accept water for making concrete, if the pH value of

water lies between 6 and 8, and the water is free from organic matter. Instead of depending on the pH value and other chemical composition, the best course to find out whether a particular source of water is suitable for concrete making or not, is to make concrete with the water and compare its 7 days' and 28 days' strength with companion cubes made with distilled water. If the compressive strength is up to 90 per cent, the source of water may be accepted.

Silts and suspended particles in water are not acceptable and undesirable as they interfere with setting, hardening and bond characteristics.

Combining water with a cementitious material forms a cement paste by the process of hydration. The cement paste glues the aggregates together, fills voids within it, and makes it flow more freely. Lower water to concrete ratio will yield a stronger and more durable concrete, while more water will give a freer flowing concrete with a higher slump. Hydration involves many different reactions often occurring at the same time. As the reactions proceed, the products of the cement hydration process gradually bonds together the individual sand and gravel particles and other components of the concrete of form a solid mass.

2.3 Pozzolanic Materials

According to Neville (1995), pozzolana is defined as naturally occurring or artificial material which contains silica in reactive form. Pozzolanas are those materials containing silica or alumina in a state which is available for reaction with lime. Murdock (1979) also defined pozzolanas as those materials which reacts with any lime set free during the setting of cement and therefore improves the durability of concrete.

According to Bhavikatti (2001), pozzolanas are siliceous or siliceous and aluminous materials, which in themselves possess little or no cementitious value, but will, in finely divided form and in the presence of moisture, chemically react with calcium hydroxide (lime) to form compound, possessing cementitious properties.

Also, Pozzolana is a natural or artificial material, which contains silica and alumina or femiginous materials in a reactive form. The natural Pozzolanas are of volcanic origin such as volcanic ashes, tuffs and other diatomaceous earths and agricultural and mine wastes. Pozzolanic materials are not cementitious in themselves, but when finely ground, contain some properties which at ordinary temperatures will combine with lime and shale in the presence of water to form compounds which have a low solubility character and possess cementitious properties.

There are various types of pozzolanas depending on their composition. Portland Pozzolana is a blend of Portland cement and pure Pozzolana such as volcanic ashes or rice-husk ash. Lime Pozzolana is a blend of natural Pozzolana with lime. Clay Pozzolana is a blend of shale or clay with pure Pozzolana. There has not been a report yet on whether pure pozzolanas are combined to form Pozzolana cement. There are already a number of pozzolanas of African origin apart from those which derive their sources from volcanoes. The mine wastes, such as bauxite wastes, riget cake, riget stone, and magnetite, ash of dry stalks of palm bunch, coal ash and almonite are new additions to the family of pozzolana of African origin. They are mainly from tin, aluminum and coal mines.

Pozzolana is not yet a new binder. It was used by early Egyptians, centuries ago. The Greeks used the volcanic tuff from the island of Thera and the Romans used the red volcanic tuff from the bay of Naples. The best variety

of tuff was found around Pozzuoli, hence it was called pozzolana. The Romans added those ashes to aged lime putting to construct their sturdy buildings (Uwe, 2010).

The high cost of production of Portland cement and the resulting high cost of construction led some countries in Europe and America to manufacture pozzolana cements, so as to reduce the demand on Portland cement. Countries that use pozzolanas are Australia, Greece, India, the Russia Federation, Spain, the United States of America and Yugoslavia. However, there are inherent problems in the manufacture of pozzolana cements which could raise the cost of their production to almost the same level as the cost of production of Portland cement. Some of the problems are: the refusal of the existing Portland cement factories to adopt pozzolana cement as one of their lines of production; a lack of sufficient quantity of pozzolana materials; high temperature demand by some pozzolanic materials to improve pozzolanic activity; and the extremely low rate of strength development characteristics of some pozzolanas due to a deficiency of essential elements.

In Africa however, Rwanda and the united Republic of Tanzania have gone into trial production of pozzolana. Organization of a small pilot plant for the manufacture of limepozzolana was reported by Apers and others. The base material is volcanic ash, found north-western Rwanda. The lime deposit was found near the site for the factory. The most common pozzolanic materials in Africa are laterite, limestone, clay and shale. Evidence is available also that agricultural wastes with pozzolanic characteristics are available in large quantities in Africa.

2.3.1 Pozzolanas and Ordinary Portland Cement

Pozzolanas do not develop strength at the same high rate as Portland cement. The strength which an ordinary Portland cement will attain in 14 days may not be attained by untreated pozzolanas in 60 days. The problem is that all pozzolanas have a low content of calcium oxide and a high content of silicon dioxide. This imbalance is responsible for the low rate strength development.

2.3.2 Measurement of Pozzolanic Activity

According to Shetty (2005), it is essential to note that pozzolanas must be in finely divided state for it to possess any cementitious property in the presence of water and calcium hydroxide. In order to determine whether or not any material is pozzolanic, the first test to be carried out is the standard consistency test on a paste made from finely ground powder of the material. This test is used to determine the standard consistency of the paste for use in the tests for the initial and the final settings of the paste. The standard consistency test gives the indication of the quantity of water to be added to the dry powder of the material being tested to produce the type of paste to be used in the vicat apparatus. The quantity of water required for the consistent paste is an indirect measure of the degree of fineness of the powder. The finer the powder, the more water it will require producing a consistent paste. The pozzolanic reaction can be schematically represented as follows:

$$Ca(OH)_2 + H_4SiO_4 \rightarrow Ca^{2+} + H_2SiO_4^{2-} + 2H_2O \rightarrow CaH_2SiO_4.2H_2O$$

The above equation of the reaction can be summarized in abbreviated notation of cement chemists as follows:

$$CH + SH \rightarrow CSH$$

The product of general formula ($CaH_2SiO_4.2H_20$) formed is a calcium silicate hydrate, also abbreviated as CSH in cement chemist notation. The ratio Ca/Si or C/S and the number of water molecules can vary and the here above mentioned stoichiometry may differ.

The initial and the final setting times of the consistent paste is also an indication of pozzolanic activity. The nearer the initial and final setting times of a pozzolanic material to that of the Portland cement, the greater the pozzolanic activity. Two typical brands of Portland cement were tested, one at the Civil Engineering Department University of Lagos, and the other at the Civil Engineering Department, City University, London. The two brands were ordinary Portland cement manufactured to the specifications of BS 12. The test in London was carried out in winter and the test in Lagos in the dry season, when the temperature was about the highest. The initial setting time for the test in London was 3.40 hours and the test in Lagos was 2.30 hours. The final setting time for the test in London was 4.27 hours whereas the test in Lagos gave 3.95 hours. The well-known behavior of cement, setting slower in cold weather than in the hot is clearly demonstrated. The same phenomenon is expected of pozzolanic materials. Therefore if a test on pozzolanic material is carried out in the cold period, the result cannot be comparable to the test carried out in the hot period, if setting time is the determinant. However, setting times are just one of the factors that determine the degree of pozzolanic activity of materials.

The chemical composition of finely ground powder is the next step in the test to identify a pozzolana, whether or not the setting times are suspicious. The need to examine the chemical composition is to find out if the principal elements which normally exist in pozzolanas are present. There are several methods to detennine the composition of materials. The major constituents

are expected in a pozzoana are silica, lime, alumina and iron oxide, although others like magnesia, calcium sulphate, potassium, titanium, sulphur and copper have been found to be present, depending on the source of materials Generally, most pozzolanas have a very high content of silica, in most cases untreated pozzolanas are deficient in calcium, which is needed to promote pozzolanic activity in combination with silica and alumina.

2.3.3 Combination of Pozzolanas

The degree of pozzolanic activity can be increased by two major methods, viz., the physical method and the chemical/calcination method. The chemical and physical mechanisms by which pozzolanas develop cementitious properties are complex. In the physical method of increasing pozzolanic action, one or two or even more pozzolanas can be combined to produce an entirely new pozzolana. The combination may be as a result of the non-availability of a sufficient quantity of one or two pozzolanas. A combination of these pozzolanas may produce increased quantity but not necessarily pozzolanic activity. The combination may otherwise, be due to a balancing of element, having found that the element that is low or absent in one pozzolana is abundantly present in the other. For example, if the fly ash with 11.6 per cent of calcium oxide is combined with the rice- husk ash with I per cent calcium oxide, a material with higher pozzolanic activity than the fly ash and the rice-husk ash may result.

2.3.4 Chemical State

The chemical conversion of pozzolana is highly technical and requires experience. Care must be taken not to introduce chemicals which are strange to the chemistry of cement and which are likely to be deleterious to

pozzolana cement when in use. The chemical process cannot be complete without calcination. But calcination involves clinkerization which can put extra cost in the production process. The chemical process must essentially be followed by two tests:

(a) Determination of the free lime, which is the same thing as the soundness test for cement.

(b) Determination of the sulphate content. The chemical process and calcination can be applied to the physical state, i.e. after the combination of one or two pozzolanas, if the result is not satisfactory. In most cases, carbonates of metals are recommended for the conversion of pozzolanas for improved pozzolanic activity.

2.3.5 Mechanical State

Mechanical tests involve the determination of the compressive and the tensile stresses on a short and long term basis. It is advisable to test the paste as well the concrete made from the presumed pozzolanic material. In order to avoid results that are not reproducing the following points are important to be noted.

(a) Temperature and humidity at the time of casting of the specimens must he recorded in order to quantify the effect of these variables on the test results.

(b) Test specimens prepared from pozzolanic materials should be cured under wet sacks and not immersed in water. Concrete, mortar or paste made from pozzolanas must be kept damp for a minimum of 60 days during which time it must have developed the full strength of an ordinary Portland cement If pozzolanic specimens are immersed in water, especially at the early ages, there is a tendency to absorb water

which may increase the water of hydration and thereby reduce the strength of the specimen.

(c) Curing under wet sacks may continue for 90 days because some pozzolanas give compressive strengths which are higher than those of ordinary Portland cement at about that age.

Pozzolanas set slowly and therefore develop very low heat of hydration. This makes them very useful for non-structural construction in hot countries. Pozzolanas are more suitable for use in hot countries than in cold ones, because high pozzolanic activity can be developed in hot countries than in cold ones by the same materials.

According to Shetty, pozzolanic materials can be divided into two groups:

(a) Natural pozzolana

(b) Artificial pozzolana

Natural pozzolana includes the following:

(i) Clay and shale

(ii) Diatomaceous earth

(iii) Volcanic tuffs and pumicites

Artificial pozzolan include the following:

(i) Fly ash

(ii) Blast ftnnace slag

(iii) Silica fume

(iv) Cassava peel ash

(v) Metakaolin

(vi) Rice husk ash

(vii) Surkhi

(viii) Bamboo leaf ash

(ix) Saw dust ash

(x) Palm bunch ash

(Shetty, 2005)

2.3.5.1 Fly Ash

According to Shetty, he defined fly ash as a finely divided residue resulting from the combustion of powdered coal and transported by the flue gases and collected by electrostatic precipitator (Shetty, 2005). Fly ash can also be defined as the most commonly known artificial pozzolana which results from the burning of pulverized coal in electric power plants (Uwe, 2010). In fly ash, the amorphous glassy spherical particles are the active pozzolanic portion of fly ash. In order to maintain the pozzolanic characteristics of fly ash, the coal is burnt at relatively low temperature because at higher temperature, the glassy particles could turn crystalline, rendering them useless as pozzolana (Shetty, 2005). Shetty also stated that those glossy particles of the fly ash are in amorphous state. He also stated that the amorphous nature of fly ash stems from the fact that it is produced by rapid cooling and solidification of molten ash and can be suggested that qualities of a good fly ash are its high fineness, shape of fly ash particles is an important characteristics as it improves the flow ability and reduces water demand.

2.3.5.2 Sawdust Ash

According to Olutoye (2010), sawdust is loose particles or wood chippings obtained as by-products from sawing of timber into standard usable sizes. Sawdust has a variety of particle uses including serving as mulch, as an alternative to clay cat litter, as fuel, or for the manufacture of particle board and above all in its finest (ash) form acts as a pozzolana and can be used for

partial replacement of cement in concrete. Sawdust can also be used as light weight aggregate to produce light weight concrete.

According to Elinwa et al (2005), Sawdust has some pozzolanic properties which can be used in concrete which helps to enhance the properties of the concrete. This artificial pozzolana according to Elinwa et al (2007) on investigation was found to be super-plasticizers making it possible to produce a self- compacting concrete. In the sense that it was able to flow under its own weight and completely fills the formwork even in the presence of dense reinforcement, without need of any vibration while maintaining homogeneity.

Sawdust ash are obtained from burning of sawdust which is a residue from sawmills. These sawdust materials being seen as a waste in sawmills is transformed into ash form by burning and can be used as a partial replacing material for cement in concretes.

2.3.5.3 Palm Bunch Ash

Palm bunch, which is a waste material from the palm oil industries, can be utilized as a partial replacing material for cement. This palm bunch can be used as cement replacement due to its content of aluminous and siliceous components in its finest form. Palm bunch can be transformed to ash form by burning and used as a partial replacing material for cement in concrete.

Palm bunch is one of the agro-waste ashes whose chemical composition contains a large amount of silica and that has high potential to be used as a cement replacement.

2.3.5.4 Blast Furnace Slag

The blast furnace slag is a non-metallic product manufactured from blast-furnace when iron ore is reduced to iron, the liquid slag rapidly cooled to form granules, which are then wound to fineness similar to Portland cement. Such a slag contains relatively high amounts of alumina.

According to Niel (1996) stated that blast furnace slag is formed as a by-product of the manufacture of iron in the blast furnace. This slag results from fusion of the lime from the limestone added to the furnace with siliceous and aluminous residue from the iron ore and from the coke used for its reduction. In the same vein, (Bonen, 2001), Kuennen (2006) defined blast furnace slag as a by-product of the manufacture of molten iron resulting from the fusion of lime and other fluxes with the ash from coke and silica and alumina from ore.

Production of blast furnace slag can exist in three forms, namely:

- Blast Furnace Block Slag (BFS)
- Granulated Blast Furnace Slag (GBFS)
- Ground granulated Blast Furnace Slag (GGBFS)
- Australian Iron and steel slag association 2010).

2.3.5.4.1 Blast Furnace Rock Slag (BFS)

Blast furnace rock slag (BFS) is formed when molten slag on leaving the furnace is directed into ground bags where it air-cools to form a crystalline rock-like material. Blast furnace rock slag (BFS) is suitable for varied uses in building applications as aggregate in concrete, construction of roads in base and sub-base course either unbound or bound. It can also be mixed with other materials for mechanical or as cementing or stabilizing binder. -

When compacted, blast furnace rock slag develops a high degree of mechanical particle interlock resulting in high shear strength partly due to

the rough texture (vesicular nature) of the slag. The chemical reactivity of the slag causes it to be self-cementing and produces engineering fill, which over a period of time forms a semi-rigid mass.

2.3.5.4.2 Granulated Blast Furnace Slag (GBFS)

Molten slag, on leaving the blast furnace is directed into a specialized plant known as granulator in which high pressure, high volume, and cold water sprays to rapidly cool the molten slag resulting in the formation of an amorphous, coarse sand sized material exhibiting hydraulic cementitious properties.

2.3.5.5 Silica Fumes

Silica fume is usually categorized as a supplementary cementitious material. This term refers to Portland cement.

According to Uwe (2010), silica fume is defined as a product of the silicon metal industry and is a superfine powder of almost amorphous silica. Silica fume is a product resulting from reduction of high purity quartz with coal in an electric ore furnace in the manufacture of silicon or ferrosilicon alloy (Shetty, 2005). During the manufacturing process of silica fume, some silicon monoxide vapour leaves the high-temperature reducing parts of the furnace where it was formed, in the upper cooler pails of the furnace; it is cooled, condensed and converted into microspheres of amorphous silica. After removing the coarser particles using a cyclone, the finely divided silica microspheres (condensed silica fume) are collected by bughouse filters (Neil, 1996;Shetty, 2005).

2.4 Engineering Properties of Concrete

Concrete possess various engineering properties which exists both its plastic and solid state. However, for the purpose of this study, the engineering properties are limited only to properties of hardened concrete which is of more interest to researchers. These engineering properties of concrete include the following; its strength (both compressive and tensile strength), elastic modulus, shear modulus, permeability, durability, creep, shrinkage and deformation etc.

2.4.1 Harshness

Bhavikatti (2000) describes this characteristic of concrete as resistance offered by concrete to its surface finishing. He goes on to explain that harshness is due to the presence of lesser quantity of fines, lesser cement mortar and use of poorly graded aggregates, it may sometimes be due to insufficient water.

2.4.2 Compressive Strength

Shetty (2005) defines strength as resistance to rupture. Strength of concrete can be measured in a number of ways, such as strength in compression, strength in tension, strength in flexure or strength in shear, all these indicate strength with reference to a particular method of testing. Concrete has relatively high compressive strength, but significantly lower tensile strength, and as such is usually reinforced with materials that are strong in tension (often steel). This is the most important property of concrete. The characteristic strength, that is the concrete grade, is measured by the 28 day cube strength. Major factor affecting the strength of concrete is the water

/cement ratio. This effect according to Shetty is supported by Abrams water/cement ratio law, which states that strength of concrete is only dependent upon water/cement ratio provided mix is workable. Other factors affecting strength are ratio of cement to aggregate, grading, surface texture, shape, strength, maximum size and stiffness of aggregate particles. All things being equal, concrete with a lower water/cement ratio is stronger than that with a higher ratio. The total quantity of cementitious materials can affect strength.

It is essential that freshly mixed concrete be thoroughly consolidated to eliminate air pockets and secure maximum density in the structure. The Engineer must prevent the occurrence of loosely textured or porous concrete matrix called "honeycombing" to achieve maximum strength and density.

The degree of curing and protection afforded after placement is highly important to the final strength attained by the concrete. It is known that the strength increases rapidly at early ages and the rate of strength gain gradually decreases. Concrete will continue to gain strength indefinitely if conditions are favorable. It is therefore, very important that curing is provided at the correct time and for the proper duration of time. Concrete strength varies with time, and the specified concrete strength is usually that strength that occurs 28 days after the placing of concrete.

2.4.3 Workability

Workability is often referred to as the ease with which a concrete can be transported, placed and consolidated without excessive bleeding or segregation, or the internal work done required to overcome the frictional forces between concrete ingredients for fill compaction. It is obvious that

no single test can evaluate all these factors. In fact most of these cannot be easily assessed even though sonic standard tests have been established to evaluate them under specific conditions.

In the case of concrete, consistence is sometimes taken to mean the degree of wetness; within limits, wet concretes are workable than dry concrete, but concrete of same consistence may vary in workability. Because the strength of concrete is adversely and significantly affected by the presence of voids the compacted mass, it is vital to achieve a maximum possible density. This requires sufficient workability for virtually full compaction to be possible using a reasonable amount of work under the given conditions. Presence of voids in concrete reduces the density and greatly reduces the strength; 5% of voids can lower the strength by as much as 30%:

2.4.4 Durability

Shetty (2005) defines durability of concrete as its ability to resist weathering actions, chemical attack, abrasion or any other process of deterioration. Durability can also be referred to as resistance to the forces of the environment such as weathering, chemical attack and fire (Bhavikatti, 2000). According to Shetty, durability may be considered to some extent in terms of compressive strength, although it is not entirely true that a strong concrete is always durable (Shetty, 2005). For example, it may be structurally possible to build bridge pier in marine conditions with $20N/mm^2$ concrete, environmental conditions can affect this structure negatively. Generally dense and strong concretes have better durability in extreme weather conditions. Also durability is maximized by adequate cement and a low water cement ratio.

2.4.5 Impermeability

This is the resistance of concrete to the flow of water through the pores (Bhavikatti, 2000). Excess water during concreting leaves excess number of continuing pores leading to permeability (which has direct repercussion on the durability of Concrete, as it reduces durability). If concrete is impermeable, corrosive agents cannot penetrate and attack it. Concrete basically has two types of pores which determine permeability. These are capillary pores (with a diameter varying between 0.01 to 10 micron) in the cement paste which coats the aggregates and larger micro voids, between 1mm to 10mm, which are caused by faulty compaction of fresh concrete. When voids are interconnected because of their large numbers and size, a continuous link is formed, which makes the concrete permeable. The three major factors which determine permeability in concrete are; water cement ratio, compaction and curing. Permeability of concrete can be controlled by using low water/cement ratio, dense and well graded aggregates, proper compaction and continuous curing at low temperature conditions.

Permeability of concrete differs from absorption.

Permeability relates to the size of the pores, their distribution and most importantly their continuity. As a result, permeability is not necessarily directly related to absorption. It has been related to water cement (w/c) ratio of concrete. Water cement ratio is the measure of the amount of water divided by the cement in a mix.

2.4.6 Creep

The relation between stress and strain for concrete is a function time. The gradual increase in the strain with time under load is due to creep, or the

increasing deformation that takes place when a material sustains a high stress level over a long time period, also the permanent dimensional changes that take place due to loading is called creep. According to Bhavikatti (2000) dimensional changes in concrete can be caused by loading and thermal expansion. Creep can thus be defined as the increase in strain under a sustained stress and because this increase can be several times as large as the strain on loading, creep is of considerable importance to structures. Whenever constantly applied loads (such as dead loads) cause significant compressive stresses to occur, creep will result.

Under normal conditions of loading, the instantaneous strain recorded depends on the speed of application of the load and includes thus not only the elastic strain but also some creep. It is difficult to differentiate between elastic strain and early creep but this is not of practical importance as it is the total strain induced by the application of load that matters. The way to avoid this increased deformation is to keep the stresses due to sustained loads at a low level.

2.4.7 Modulus of Elasticity

Modulus of elasticity of concrete is a function of the modulus of elasticity of the aggregate and the aggregate and the cement matrix and their relative proportions. The modulus of elasticity of concrete is relatively constant at low stress levels but starts decreasing at higher stress levels as matrix cracking develop. The elastic modulus of the hardened paste may be in the order of 10-30GPa and aggregate about 45- 85GPa. The concrete composite is then in the range of 30-50GPa.

2.4.8 Shrinkage

As concrete cures, it shrinks because the water not used for hydration gradually evaporates from the hardened mix. Concrete shrinks with age, the total shrinkage depends on the constituents of concrete, size of member and environmental conditions (Bhavikatti, 2000). For large continuous elements, such shrinkage can result in the development of excess tensile stress, particularly if high water content brings about a large shrinkage. Concrete, like all materials also undergoes volume changes due to thermal effects, and in hot weather the heat from the exothermic hydration process adds to this problem. Since concrete is weak in tension, it will often develop cracks due to such shrinkage and temperature changes. For example, when a freshly placed concrete slab-on-grade expands due to temperature change, it develops internal compressive stresses as it overcomes the friction between it and the ground. Later when the concrete cools (land shrinks as it hardens) and tries to contract, it is not strong enough in tension to resist the same frictional forces. For this reason, contraction joints are often used to control the location of cracks that inevitably occur and so-called temperature and shrinkage reinforcement is placed in directions where reinforcing has not already been specified for other reasons.

2.4.9 Bleeding of Concrete

Bleeding in concrete is sometimes referred as water gain. It is a particular form of segregation, in which some of the water from the concrete comes out of the surface of the concrete. Bleeding is predominantly observed in a highly wet mix, badly proportioned and insufficiently mixed concrete. In

thin members like roof slabs or road slabs, and when concrete is placed in sunny weather; excessive bleeding is observed.

Due to bleeding, water comes up and accumulates at the surface. Sometimes, along with this water certain quantity of cement comes to the surface. When the surface is worked up with the trowel, the aggregate goes down and the cement and water come to the top surface. This formation of the cement paste at the top surface is known as 'laitance'. In such a case, the top surface of slabs and pavements will not have good wearing quality. This laitance further on roads produce dust in dry season and mud in rainy season.

Water while traversing from bottom to top, makes continuous channels. If the water cement ratio used is more than 0.7, the bleeding channels made will remain continuous and not segmented. These continuous bleeding channels are often responsible for causing permeability of the concrete mixtures. While the mixing water is in the process of coming up, it may be intercepted by aggregates, the bleeding water is likely to accumulate below the aggregate. This accumulation of water creates water voids, and reduces the bonds between the aggregates and the paste. This is more pronounced in the case of flaky aggregates. Similarly, the water that accumulates below the reinforcing bars reduces the bond between the reinforcement and the concrete. The poor bonding between the aggregate and the paste or the reinforcement and the paste due to bleeding can be remedied by re-vibration of the concrete. The formation of laitance and the consequent bad effect can be reduced by delayed finishing operations.

Bleeding rate increases with time up to about one hour or so and thereafter the rate decreases, but continuous more or less till the final setting time of cement. Bleeding can also be reduced by proper proportioning and uniform

complete mixing. Use of finely divided pozzolanic material reduces bleeding by creating a longer path for the water to traverse.

Bleeding is not completely harmful if the rate of evaporation of water from the surface is equal to the rate of bleeding. Removal of water after it has played its role in providing workability from the concrete by way of bleeding will do the concrete good.

Early bleeding when the concrete mass is fully plastic may not cause much harm, because concrete being in a fully plastic condition at that stage, will get subsided and compacted, it is the delayed bleeding, when the concrete has lost its plasticity which causes undue harm to the concrete. Controlled re-vibration may be adopted to overcome the bad effect of bleeding.

2.4.10 Segregation of Concrete

Segregation can be defined as the separation of the constituent materials of concrete. A good concrete is one in which all the ingredients are properly distributed to make a homogeneous mixture. There are considerable differences in the sizes and specific gravities of the constituent ingredients of concrete; therefore it is natural that the materials show a tendency to fall apart. Segregation may be of three types;

(a) Coarse aggregate separating out or settling down from the rest of the matrix.

(b) Paste separating away from aggregate.

(c) Water separating out from the rest of the material being a material of lowest specific gravity.

A well-made concrete, taking into consideration main parameters such as grading, size, shape and surface texture of aggregate, with optimum quantity of water makes a cohesive mix. Such concrete will not exhibit any

tendency of segregation. The cohesive and fatty characteristics of matrix do not allow the aggregate to fall apart at same time; the matrix itself is sufficiently contained by the aggregate. Similarly, water also does not find it easy to move out freely from the rest of the ingredients. The conditions favourable for segregation are:

(a) Badly proportioned mix where sufficient, matrix is not there to bind and contain the aggregates.

(b) The sufficiently mixed concrete with excess water content

(c) Dropping of concrete from heights as in the case of placing concrete in column concreting.

(d) When concrete is discharged from badly designed mixes, or from a mixer with worn out blades.

(e) Conveyance of concrete by conveyor belts, while barrow, long distances haul by dumper, long life by skip and hoist are the other situation promoting segregation of concrete.

Vibration of concrete is one of the important methods of compaction. It should be remembered that only comparatively dry mix should be vibrated.

If too wet a mix is excessively vibrated, it is likely that the concrete gets segregated. It should also be remembered that vibration is continued just for required time for optimum result. If the vibration is continued for a long time, particularly in too wet a mix, it is likely to result in segregation of concrete due to settlement of coarse aggregate in matrix.

2.5 Optimization of Material

Optimization or linear programming as used in mathematics, computer science, engineering and economics refers to choosing the best element from some set of available alternatives. In simple case this means solving

problems in which one seeks to minimize or maximize a real (objective)function by systematically choosing the value of real or integer variable from within an allowed set.

Chinneck, (2007), defined optimization as the art of allocating scarce resources to the best possible effect. Optimization techniques are used in everyday life in industrial planning, transportation problem, decision making, scheduling etc. According to Simon (2003), the object of optimization may be to find the best settings, that is, settings which maximize or minimize a particular response or responses or to meet a set of specification. In either case, optimization usually involve considering several responses simultaneously. In order to optimize responses simultaneously appropriate model would be established.

Optimization may be done using either mathematical/regression (numerical) methods, graphical (contour plot) approach/ model or soft computing (artificial intelligence) methods. In general however optimization using graphical method is limited to cases in which there are only a few responses. Mathematical (numerical) optimization requires defining an objective function (called desirability or score function) that reflects the levels of each response in terms of minimum zero or maximum (one) desirability (Simon et al, 2003).

The summary of the optimization process can be shown schematically in figure 2.2;

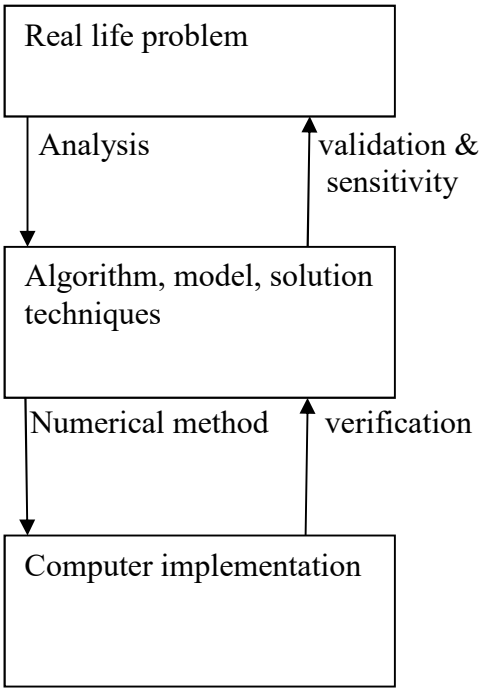

Figure 2.2: the process of optimization

The arrows in the figure above indicate the normal process of optimization cycle moving from real word problem to the algorithm, model or solution technique known as analysis. It is here that the main work of abstracting away irrelevant details and focusing on the important major factors that actually perpetuated the problem takes place.

Moving from the algorithm model or solution technique to the computer implementation is generally the province of numerical methods. Issues such as calculation accuracy when using digital computers, efficient implementation of matrix inversion techniques and the likes, the movement from computer implementation back to algorithm, model or solution technique is called verification. The main idea is to make sure that the computer implementation is actually carrying out the algorithm as it is

supposed to. The process of moving between the algorithm model or solution techniques and the "real life problem" is validation and sensitivity analysis. Validation is the process of making sure that the model or solution technique is appropriate for the real situation. Sensitivity analysis looks at the effect of the specific data on the result.

2.6 Methods of Optimization

Many of the large scale optimization techniques in general use today can trace their origins to methods developed during World War II by George Dantzig in 1947, an American mathematician. The methods deal with the massive logistical issues raised by huge armies having millions of men and machines (Chinneck, 2007). This was perfected shortly after the war when the first electric computer became available. New optimization techniques are in invoke, often stimulated by fascinating insights from other fields. The optimization technique that was adopted in this work is the "statistical experiment design approach".

2.6.1 Statistical Experimental Design Approach

The statistical design approach can be used in industry to optimize products such as gasoline, food products and detergents. In the case of concrete it is a combination of several components. According to Simon (2003), the performance criteria for concrete in the fresh state include setting time, temperature, viscosity, mechanical properties such as strength, elastic modulus, creep and shrinkage, durability, etc.

The application involves the use of theory of statistics-Analysis of Variance (ANOVA) and some specified laboratory results from practical experiments

to formulate the mathematical model (equation) .This will later be used to predict the strength and other properties with assumed mix ratio.

The following optimization shall be discussed, mixture design approach/ method, mathematical independent variable method, regression method (for concrete mixture) neutral network method and genetic algorithm method.

2.6.1.1 The Mixture Approach

The mixture approach using the simple method was invented by George Danzig during the World War II. Scheffe, (1958) improved this method and introduced simplex lattice design. Later in 1963 he also introduced simplex centroid design.

Simplex is a factor space in a straight line comprising of two components at both ends. The points within a simplex lattice (space factor) are symmetrically arranged equidistant from the centroid.

In the design, a suitable polynomial will be chosen to represent the response of the entire space. The number of points on the space corresponds to the number of parameter in the chosen polynomial equation.

2.6.1.2 Mathematical Independent Variable (MIV) Approach

This approach can also be called the factorial design method. In the factorial design approach if the mixture contains of q component materials (where q is the number of component materials) the q components of a mixture are reached to (q-l) independent variable using the two components as an independent variable (Simon et al, 2003). In the case of concrete, water/ cement ratio is a natural choice of this ratio variable. For the situation with q-l independent variables, a 2-1 factorial design forms

backbone of the experiment. Also with mixture approach, empirical models are fit to the data and polynomial model (linear or quadratic) are used.

2.6.1.3 Regression Method

According to Mandenball (2003), a set of parameters X_1, X_2, X_3,..,X_n known as predictors can be used to predict the probable value of a dependent variable Y with a particular degree of certainty. Osadebe (2003) assumed that the response function f(z) is continuous and differentiatiable with respect to its predicator Z_1 The two researchers presumed that so long as long as the values of the predictors are known, the corresponding value of the dependent variable can be predicted with some degree of certainty (compressive strength, cost etc). In this method few points of observation will be used to formulate a model. Once the model has been formulated and validated it can be used to predict future values of independent variable.

2.6.1.4 Artificial Intelligence Method

A reliable treatment of natural phenomena is based on measurements and descriptions based on relationships between the observed results. From the theoretical point of view, the relationships are most appropriately specified in terms of abstract mathematical models representing mathematical laws. But from the practical point of view, simulated analogue models based on electronic devices are sometimes more convenient. A neural network or neural network-like system is one such analogue model. The method employed by these models is called artificial Intelligence method.

In recent years there has been an increasing number of studies and applications of intelligent systems in civil engineering. They are used to handle the data obtained from observation and /or measurements in the field and/or in the laboratory. The literature review showed various methods

mainly used in structural engineering. These include expert systems, neural networks, fuzzy logic, genetic algorithms, rough sets, KBS, NPL etc.

The applications of these methods include design optimization of reinforced concrete members and frames, analysis of bridge condition rating data, optimization of bridge deck rehabilitation and pavement rehabilitation.

Artificial intelligence, a branch of computer science (or soft science, from some sources), consists of several computing paradigms, including knowledge-based systems known from the past also as expert systems, neural networks (learning and adaptation), fuzzy set theory(knowledge representation via frizzy IF THEN rules), and genetic algorithms and/or simulated annealing. For the sake of completeness, the most important paradigms, mentioned above, are briefly presented. The focus in this report is mainly on neural networks and its application in prediction of compressive strength of sawdust-ash cement concrete. Some artificial intelligence methods are as discussed below:

(a) Artificial neural networks (ANNs)

An ANN takes after its biological analog through its composition of nodes and the connections among them. The advantages of using ANNs include improvements in the speed of operation by parallel implementation either in hardware or in software. ANNs are a kind of algorithms with certain characteristics that can be used to describe different (natural) phenomena or to solve some certain optimization tasks. Different types of Neural Networks are used for different problems. As an intelligent system, the back- propagation (BP) Neural Network is often used. The common approach to the construction of optimization neural networks is to formulate the problem in terms of minimizing a cost or energy function - this

approach is known as the Hoptield network (Hopfield, 1985) .Self-organising of neurons is also an optimization problem which can be connected to the cost minimization. Some attempts have been made in the past to show how the ANNs can be used in prediction of compressive strength of concrete.

(b) Genetic algorithms (GA)

Genetic algorithms are search algorithms based on the mechanics of natural selection and natural genetics. They combine survival of the fittest among string structures with a structured yet randomized information exchange to form a search algorithm with some innovative flair of human search. Genetic algorithms as an optimization method have achieved increasing popularity as researchers have recognized the shortcomings of calculus-based and enumerative schemes.

Genetic algorithms are different from standard optimization and search procedures in four ways:

(i) The GAs work with the base in the code of the parameters or variables group (artificial genetic strings) and not with the parameters or variables themselves.

(ii) The GAs work with a set of potential solutions (population) instead of trying to improve a single solution.

(iii) The GAs do not use information obtained directly from the object function, of its derivates, or of any other auxiliary knowledge of the same one.

(iv) The GAs use probabilistic transition rules, not deterministic rules.

(c) Fuzzy sets

Fuzzy logic is a superset of conventional (Boolean) logic that has been extended to handle the concept of partial truth – truth values between "completely true" and "completely false". It was introduced by Dr. Lotfi Zadeh in the 1960's as a means to model the uncertainty of natural language. Just as there is a strong relationship between Boolean logic and the concept of a subset, there is a strong relationship between fuzzy logic and frizzy subset theory. Since the introduction of the frizzy logic, frizzy calculus and fuzzy differential equations have been introduced in different field of application of artificial intelligence.

2.7 Advantages of ANN Method over Regression Model Methods

The main advantage of this method is that one does not have to assume an explicit model form which is a prerequisite in the parametric approaches. Indeed, in ANN models, a relationship of a possibly complicated nature between input and output variables is generated by the data points (Shahin et.al, 2006).

Also, this method is preferred to regression models because it is able to construct a supposedly complex relationship between the input and output variable with an excellent level of accuracy (Shahin et.al, 2006).

In other word, ANN plays out in organic learning as it can generate data from its inputs beyond that which was given to it. In non-linear data processing, it can interfere connections between data points so could perform shortcuts. The network can tolerate faults as it can route around missing data.ANN can regenerate data which helps in self repairs.

The `black box nature` of the network offers the user with no or less knowledge of its internal working. This is one of the problems associated

with the network together with the network prone to overfitting, greater computational burden, and the empirical nature of model development.

Its benefits cover robotics, computer, spacecrafts, cellular, scanners, etc.

2.8 Neuron Model and Network Architectures

2.8.1 Neuron Model

Simple Neuron:

A simple neuron with a single input is shown in Fig. 2.3. The scalar input (p) is multiplied by the weight (w) and wp is obtained. A bias (b) is added to wp and the net input (n) is formed. A transfer function (activation function), f, is used to obtain the scalar neuron output (a) from the net input.

Then the neuron output is calculated as:

$$a = f(wp + b) \tag{2.1}$$

Bias may be considered as a weight that has an input value of 1. The bias can be omitted in some neural networks. The transfer function may be a linear or non-linear function of n. Transfer functions are used to satisfy some specification of the problem that the neuron is attempting to solve. One of the most commonly used transfer functions is the log- sigmoid transfer function shown in Figure 2.4. This transfer function transfers the input into the range 0 to 1 as an output. The log-sigmoid transfer function is generally used in back propagation because that it is differentiable. Various transfer functions are used in neural networks to achieve the desired goal.

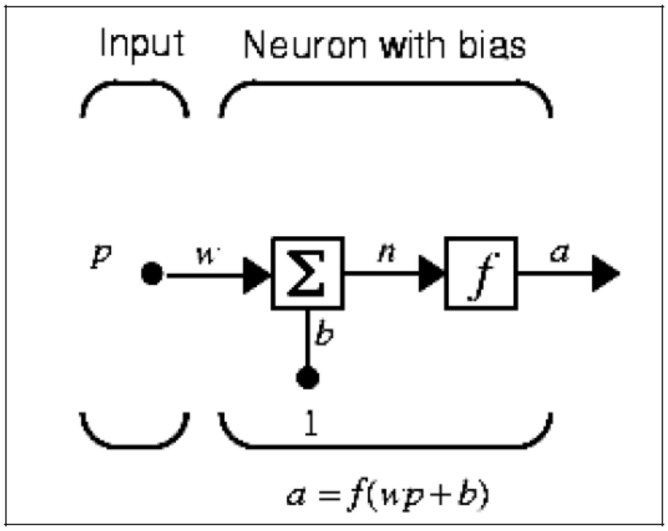

Figure 2.3: Single neuron architecture (Hagan et al. 1996)

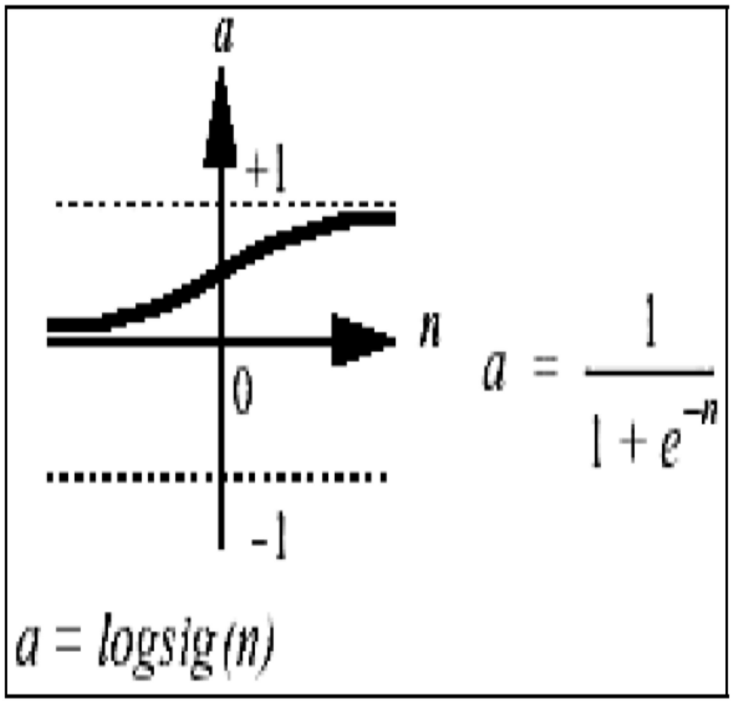

Figure 2.4: Log-sigmoid transfer function (Hagan et al. 1996)

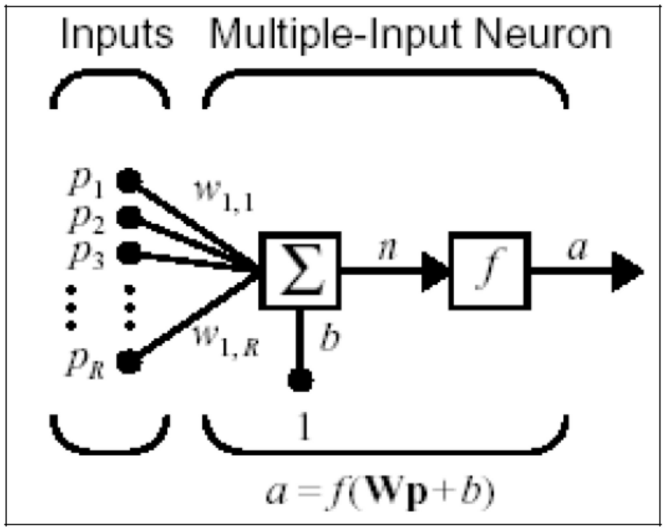

Figure 2.5: Multiple input neuron (Hagan et al. 1996)

Neuron with Multiple Inputs:

Generally, a neuron has more than one input. A neuron with a R-element input vector is shown in Fig. 2.5, The individual inputs $p_1, p_2, p_3, \ldots, p_R$ are multiply by the corresponding weights $w_{1,1}, w_{1,2}, w_{1,3}, \ldots, w_{1,R}$ of the weight matrix W. The net input, n, is calculated as:

$$n = w_{1,1}\, p_1 + w_{1,2}\, p_2 + w_{1,3}\, p_3 +, \ldots, + w_{1,R}\, p_R + b \qquad (2.2)$$

This expression can also be written in the matrix form as:

$$n = Wp + b \qquad (2.3)$$

Then the output can be expressed as:

$$a = f\,(Wp + b\,) \qquad (2.4)$$

2.8.2 Network Architectures

A Layer of Neurons:

Multiple neurons are combined in parallel to form a layer. A single layer of *S* neurons with *R* input elements is shown in Fig. 2.6. Each input is connected to each neuron with the weight matrix that has *S* rows and *R* columns. Each neuron has a bias *bi*, a summer, a transfer function *f*, and an output *ai*. The weight matrix is expressed as:

$$\mathbf{W} = \begin{bmatrix} w_{1,1} & w_{1,2} & \cdots & w_{1,R} \\ w_{2,1} & w_{2,2} & \cdots & w_{2,R} \\ & & & \\ w_{S,1} & w_{S,2} & \cdots & w_{S,R} \end{bmatrix} \tag{2.5}$$

Where the row indices indicate the destination neuron, and the column indices indicate the input source for that weight. Thus $w_{1,2}$ indicates that this weight represents the connection to the second neuron from the first input.

Multiple Layers of Neurons:

A single layered network is rarely capable of solving the problems. So generally several layers take place in neural networks. A three layer network is shown in Fig. 2.7.

As shown in Fig. 2.7, the layer number is indicated as a superscript to the names of the variables. There are *R* inputs and S^1 neurons in the first layer, S^1 inputs and S^2 neurons in the second layer. It can be seen that the outputs

of the first and second layers are inputs for the second and third layers respectively. Different layers can have different number of neurons.

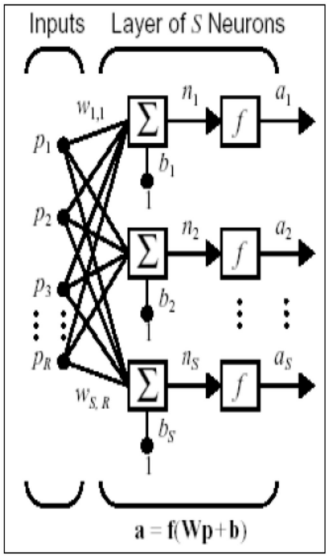

Figure 2.6: A layer of neurons (Hagan et al. 1996)

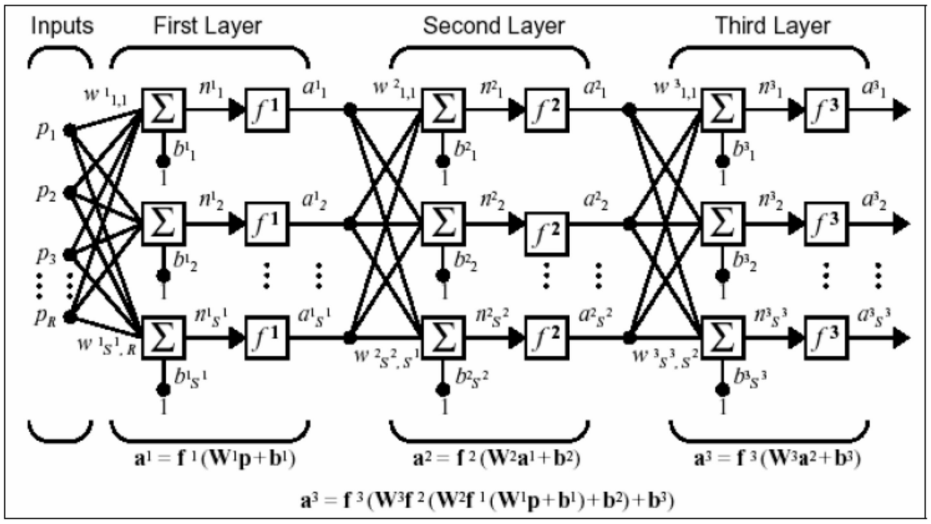

Figure 2.7: Three-layer network (Hagan et al. 1996)

A layer whose output is the network output is called as the output layer. The other layers are called as hidden layers. The network in Fig. 2.7 has two hidden layers which are layers 1 and 2, and one output layer that is layer 3.

Multilayer networks are powerful. In general, a network of two layers where the first layer is sigmoid and the second layer is linear can be used to approximate any function. This kind of network is widely used in *back propagation* which is discussed later in this chapter.

2.8.3 Training of the Network

Training can be defined as the modification of the connection strengths (weights) of the network by a specified learning rule to reach the desired solution. The learning rule defines how the network is modified in response to experience.

A learning rule is defined as a procedure for the modification of the weights and biases of the network. (This procedure is often referred as training algorithm.) The learning rule is applied to train the network to perform a particular task. In *supervised learning*, the learning rule is provided with the inputs and the outputs. In *unsupervised learning*, no target outputs are available and the weights are modified in response to inputs only.

2.8.3.1 The LMS Algorithm

The least mean square (LMS) learning rule (also called as standard delta rule) by Widroff-Hoff (1960) is used in the training of *linear filters* (See Fig. 2.8) which are one layered neural networks with linear transfer functions.

The LMS algorithm adjusts the weights of the linear network to minimize the squares of differences between the actual and the desired (target) output values summed over the output layers and all pairs of input/output vectors.

Let's define

$$E_p = \frac{1}{2}\sum_j (t_{pj} - o_{pj})^2 \qquad (2.6)$$

As the measure of error on the input/output pattern *p* and let E = ΣEp be the overall measure of error (the error function or the performance function). The index *p* ranges over the set of input patterns, *j* ranges over the set of output units, and *Ep* represents the error on pattern *p*. The variable $\mathbf{t}_{pj}$ is the desired output and $\mathbf{o}_{pj}$ is the actual output of the *j*'th output unit for pattern *p*. It is desired to find the weights that minimize the error function which is described above.

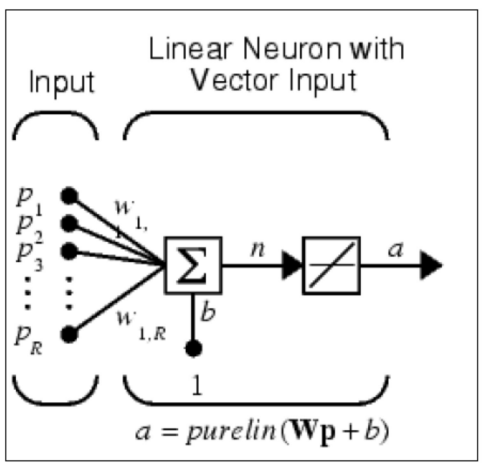

Figure 2.8: An example of linear filter with R input elements (Hagan et al. 1996)

For this purpose, it is useful to consider how the error varies as a function of any weight. The LMS procedure finds the weights that minimize the error function using a method called as *gradient descent.* That is, after each pattern is presented, the error is computed and each weight is moved down the error gradient toward its minimum value for that pattern. Since the entire error function on each pattern presentation cannot be mapped, a

simple procedure to determine how much to increase or decrease each weight must be found. The idea of gradient descent is to make a change in the weight proportional to the negative of the derivative of the error, as measured on the current pattern with respect to each weight. Thus the learning rule becomes:

$$\Delta w_{ji} = -k \frac{\partial E_p}{\partial w_{ji}} \tag{2.7}$$

Where k is the proportionality constant, to take the derivative of the performance function, the chain rule can be used to write the derivative as the product of two parts as:

$$\frac{\partial E_p}{\partial w_{ji}} = \frac{\partial E_p}{\partial o_{pj}} \frac{\partial o_{pj}}{\partial w_{ji}} \tag{2.8}$$

The first part can be found from Equation (2.9) as:

$$\frac{\partial E_p}{\partial o_{pj}} = -(t_{pj} - o_{pj}) = -\delta_{pj} \tag{2.9}$$

Since we have linear layers,

$$o_{pj} = \sum_i w_{ji} i_{pi} \qquad (2.10)$$

From which it can be concluded that:

$$\frac{\partial o_{pj}}{\partial w_{ji}} = i_{pi} \qquad (2.11)$$

Where *ipi* is the *i'*th element of the input pattern *p*. substituting back into Equation (2.11),

$$-\frac{\partial E_p}{\partial w_{ji}} = \delta_{pj} i_{pi} \qquad (2.12)$$

Therefore Δw_{ji} can be found as:

$$\Delta w_{ji} = \mu . \delta_{pj} . i_{pi} \qquad (2.13)$$

Where $\mu = 2k$

According to this learning procedure, each weight is changed until it reaches its minimum error value. When all the weights reach their minimum points, the system reaches equilibrium. Then the problem is entirely solved or the set of weights that produce as small an error as possible is obtained. (Mccelland and Rumelhart 1998)

2.9 Back Propagation

Back propagations are a kind of neural networks which are widely used in solving problems that require pattern mapping (an input pattern is given and the network produces associated output pattern). They are created by generalizing the standard delta rule to multiple-layer networks with nonlinear differentiable transfer functions.

Back propagation learning rules are based on the simple concept as in the delta rule; the error between the actual output and the desired output is lessened by modifying the weights and as a result future responses are more likely to be correct. When the network is given an input, the output units are obtained by simulation of the network. The output layers then provide the network's response. When the network corrects its internal parameters, the correction mechanism starts with the output layers and back-propagates backward through each internal (hidden) layer. Hence the term back propagation is used for this kind of networks. (Dayhoff 1990)

The power of back propagation lies in its ability to train hidden layers and therefore escape the restricted capabilities of single layer networks (like linear filters in which the LMS learning procedure is used).

2.9.1 Back Propagation Algorithm (The Generalized Delta Rule)

It is shown how the standard delta rule implements gradient descent in sum squared error for linear activation (transfer) functions. There is no hidden unit in this case and the error surface is shaped like a bowl with only one minimum.

However if hidden units exist, there is a possibility of getting stuck in local minima. Also, linear systems using LMS algorithms cannot compute more in multiple layers than they can in a single layer.

The basic idea of the back propagation learning method is to combine a non-linear system capable of making decisions with the objective error function of LMS and gradient descent. To do this, the derivative of the error function with respect to any weight in the network is calculated and then the weight is changed according to the rule:

$$\Delta_p w_{ji} = -k \frac{\partial E_p}{\partial w_{ji}} \qquad (2.14)$$

With an appropriate choice of non-linear transfer function, the back propagation learning rule can be derived. The results of this derivation are summarized in three equations. (Rumelhart et al., 1986):

First, the generalized delta rule has exactly the same form as the standard delta rule: The weight on each line should be changed by an amount proportional to the product of an error signal, δ, available to the layer receiving input along that line and the output of the layer sending activation along that line. In symbols,

$$\Delta_p w_{ji} = \mu . \delta_{pj} . o_{pi} \qquad (2.15)$$

The other equations specify the error signal. The determination of the error signal, δ_{pj}, is a recursive process and starts with the output layers. The error signal of an output layer is similar to the standard delta rule and can be expressed as:

$$\delta_{pj} = (t_{pj} - o_{pj}) f_j'(net_{pj}) \quad (2.16)$$

Where net_{pj} is the net output and f'_j (net_{pj}) is the derivative of the non-linear activation function that maps the total input to the layer to an output value. The error signal for hidden layers for which there is no specified target is determined recursively in terms of the error signals of the layers to which it directly connects and the weights of these connections. That is

$$\delta_{pj} = f_j'(net_{pj}) \sum_k \delta_{pk} w_{kj} \quad (2.17)$$

Where the layer is not an output layer

Therefore, the generalized delta rule involves two phases: During the first phase, the input is presented and propagated forward through the network and the output value o_{pj} is calculated for each layer. This output is then compared with the target values and an error signal δ_{pj} is computed for each output layer. In **the second phase**, a backward pass through the network is done during which the error signal is passed to each layer and the appropriate weight changes are made. This second phase involves the recursive computation of δ as indicated above.

Momentum:

The generalized delta rule requires only that the change in weights be proportional to (∂Ep /∂w). The constant of proportionality is the learning rate. The larger this constant, the larger the changes in the weights, Generally, a learning rate as large as possible is chosen without leading to oscillation that offers the most rapid learning. One way to increase the

learning rate without leading to oscillation is to modify the generalized delta rule by adding a momentum term. This can be accomplished by Equation (2.18):

$$\Delta w_{ji}(n+1) = \mu(\delta pj.\, o_{pi} + \alpha \Delta w_{ji}(n) \qquad (2.18)$$

where n is the presentation number, μ is the learning rate and α is a constant that determines the effect of weight changes on the direction of movement in weight space. This provides a kind of momentum in weight space that filters out high-frequency variations.

CHAPTER THREE
MATERIALS AND METHODS

3.1 Materials

The materials used for this research work include sawdust ash, ordinary Portland cement, sharp-river sand, granite chippings, aggregate and water. Each of these materials is discussed below.

3.1.1 Cement

Ordinary Portland cement was used in this research work. It was purchased at the local market in Owerri Municipal area of Imo State. It has a constant specific gravity of 3.15.

3.1.2 Aggregate

Two sets of aggregates were used for this work:

(i) **Fine aggregate:** This was obtained from local market in Owerri, the capital city of Imo State. As at the time of purchase the sharp river sand was wet but free from debris and deleterious matter and clay.

(ii) **Coarse aggregate:** The coarse aggregate used for this were bought from stone/gravel dealers in Owerri. The granite chipping was reported to have been quarried by Crushed Rock Industries in Ishiagu along Enugu-Port Harcourt express way, Ebonyi state. The material was clean and free from dirt and excessive dust particles.

The two types of aggregates were weighed, dried and well proportioned before the test; the drying process was by air-drying. The various tests like

specific gravity, bulk density, silt content, and dry density were carried out on aggregates, sieve analysis test was done on both aggregates and the graph plotted on a semi-log graph to show the particle size distribution.

3.1.3 Water

Water is an important requirement for the production of concrete. It is used in concrete work for hydration of cement paste, which provides the medium for the aggregates to be bound together and make the concrete mix workable. The water used for mixing of concrete was collected from a borehole at the premises of Federal Polytechnic Nekede, Owerri-West, Imo State. The water was clean and the free from salt and harmful chemicals that can impair the desired quality of concrete.

3.1.4 Sawdust

This is a by-product from timber, it is a waste product obtained during sawing of wood into marketable sizes and use. The sawdust was obtained from timber shed at Ogbo-Osisi at Naze along Owerri-Aba expressway.

This material was first dried to remove the natural moisture and waste burnt in the absence of air, in an enclosure at temperature of about 400-500°C and the ash was allowed to cool, thereafter the ash was sieved with 150µm sieve aperture to obtain the finest particle of material which approximates to the fineness of that of cement used. The chemical analysis was carried out in Project Development Institute, Emene, Enugu state.

No further processing and preparation was done in cement and water before use other than chemical analysis and measurement.

3.2 Experimental Method

Various tests were carried out during this project on concrete and aggregate. These tests were carried out at Federal Polytechnic Nekede and Federal University of Technology Owerri, Imo State.

The tests carried out were:

(i) Sieve Analysis
(ii) Specific gravity of coarse aggregate
(iii) Silt content test on fine aggregate
(iv) Bulk density test
(v) Slump test
(vi) Compressive strength test

The details of the tests carried out are explained as follows:

3.2.1 Sieve analysis

An air dried sample of the aggregate was prepared by quartering, and an appropriate weight of 1000g and 500g of coarse and fine aggregates were weighed. This material was poured into stack of sieves of appropriate aperture starting from the largest down to pan and was shaken. The mass of coarse and fine aggregate retained in each sieve at the end of the operation was weighed and recorded. The cumulative percentage by weight passing each of the sieves was calculated to the nearest whole number and the percentage by weight of total sample passing one sieve calculated to the nearest whole number.

An illustrative specimen chart was plotted on semi-log graph to show the percentage passing against sieve size.

3.2.2 Determination of Specific Gravity determination and coarse aggregate

Apparatus:

Specific gravity bottle

Weighing balance

Procedure:

According to BS1881, part 103, six specific gravity bottles were used for the experiment, three for coarse aggregate and the other three for fine aggregate sample. The mass of the specific gravity bottles were measured for the fine and coarse aggregate sample. Their masses were recorded as M_1, the bottles for coarse aggregate samples were filled with 200g sample of the coarse aggregates. The same was done for the fine aggregate and their masses were measured and recorded as M_2. The bottles already containing the various aggregate samples were filled with water to the brim and their masses measured and recorded as M_3. The bottles were then emptied and filled with water alone and their masses were measured and recorded as M_4.

The volume of the aggregate was calculated as:

$$(M_4 - M_1) - (M_3 - M_2) \quad (3.1)$$

Finally the specific gravity GS of the samples was calculated as follows:

$$GS = \frac{M_2 - M_1}{(M_4 - M_1) - (M_3 - M_2)} \quad (3.2)$$

For each sample of the two aggregates and then their average was taken as the specific gravity of fine and coarse aggregates respectively.

3.2.3 Silt content test on fine aggregate

The process entails adding one percent solution of common salt (NaCl) in water. Place 50ml of the solution in 250ml mercury cylinder. Add sand gradually until it levels to 100ml and solution added until the total volume of the mixture in the cylinder is 150ml. Cover the cylinder with Pam and shake vigorously repeatedly turned upside down and then allow to stand for about 3 hours, the clay and silt content will settle above the sand and the height of this layer in mm can be expressed as the percentage of the sand below:

$$\frac{\text{Thickness of silt/clay x 100\%}}{Height\ of\ Sand\ below} = Silt\ content(\%) \qquad (3.3)$$

3.2.4 Bulk Density

Bulk density was carried out for both coarse and fine aggregate and also on hardened concrete. The fine and coarse aggregates were filled into a mould of known volumes respectively in three layers using a scoop and each layer was compacted 25 times with a tamping rod and the top of the mould was then leveled into the rod. After this, the filled moulds were taken to the weighing machine, weighed and their mass recorded, note, the empty mould was first weighed before filling them with the aggregates. The bulk densities for sand and granite were obtained from the following expression:

$$\text{Bulk density} = \frac{\text{Weight or mass sand}}{\text{Volume of mould}} \qquad (3.4)$$

Let

W_1 = Weight of empty mould (g)

W_2 = Weight of mould + Aggregates (fine or coarse)

$$Bulk\ density = \left\{\frac{W_2 - W_1}{V}\right\}\ X\ 10^{-6} kg/m^3 \qquad (3.5)$$

For dry/ hardened concrete, Density = $\frac{Weig \quad of\ cube\ X\ 10^{-6} kg/m^3}{\text{Volume of mould}}$ (3.6)

This was done for all the cubes and the results were recorded.

3.2.5 Slump Test

A slump cone of 300mm height was placed on a tray, with the cone pressed upon the tray the concrete mix is loaded into it, using the scoop. The mix was placed in four layers, with each layer compacted (with tamping rod of 16mm diameter and 350 mm height) 25 times. After compaction, it was allowed to overfull the slump cone and then the tamping rod was used to level it. A stop watch was started, and immediately the cone was removed from the concrete by raising it slowly and carefully in a vertical direction. In 10 seconds. This allowed the concrete to subside thus showing the difference in altitude between the height of the mould and that of the highest point on the subsided concrete. The slump which is the subsidence of the concrete was measured. Using a 30cm (300mm) steel rule, and then recorded. The type of slump was also taken into account. This procedure was repeated for all the other mixes.

3.3 Concrete Mix Ratios

Reasonable Numbers of concrete mix ratios were obtained from similar past experimental works in Civil Engineering Department, Federal University of

Technology Owerri. (Anyanwu, 2011). Thirty observations of these mix ratios generated are shown in Table 3.1

Table 3.1: Mix Ratios for Thirty Observations generated from past experimental works.

Points	**Real Mix ratios**				
	Water S_1	**Cement** S_2	**SDA** S_3	**Sand** S_4	**Granite** S_5
N_1	0.500	0.95	0.05	2.25	4.00
N_2	0.55	0.90	0.10	1.75	3.50
N_3	0.60	0.85	0.15	2.25	4.25
N_4	0.45	0.80	0.20	1.50	3.00
N_5	0.65	0.75	0.25	2.50	5.00
N_{12}	0.525	0.925	0.075	2	3.75
N_{13}	0.55	0.90	0.10	2.25	4.125
N_{14}	0.475	0.875	0.125	1.875	3.5
N_{15}	0.575	0.85	0.150	2.375	4.5
N_{23}	0.575	0.875	0.125	2	3.875
N_{24}	0.50	0.85	0.150	1.625	3.25
N_{25}	0.60	0.825	0.175	2.125	4.25
N_{34}	0.525	0.825	0.175	1.875	3.625
N_{35}	0.625	0.80	0.20	2.375	4.625
N_{45}	0.55	0.775	0.225	2	4
	CONTROL				
C_1	0.550	0.900	0.100	2.083	3.92
C_2	0.520	0.867	0.133	2.000	3.75
C_3	0.533	0.833	0.167	2.083	4.00
C_4	0.525	0.8375	0.125	2.9375	3.688
C_5	0.55	0.8375	0.1625	2.125	4.0625
C_6	0.575	0.8625	0.1375	2.1875	4.1875
C_7	0.05375	0.9125	0.0875	2.125	3.9375
C_8	0.60	0.825	0.175	2.375	4.5625
C_9	0.52	0.890	0.11	2	3.75
C_{10}	0.55	0.85	0.15	2.05	3.95
C_{11}	0.545	0.855	0.145	2.10	4.0
C_{12}	0.545	0.835	0.165	1.975	3.85
C_{13}	0.57	0.8675	0.1325	2.2375	4.2375
C_{14}	0.545	0.855	0.145	2.05	3.9375
C_{15}	0.5375	0.8575	0.1425	2.15	4.075

Legend: SDA= Sawdust Ash

3.4 Compressive Strength Test

Compressive strength tests were carried out in order to determine the responses needed to formulate and validate the optimization function. The sawdust ash-cement concrete specimen, were concrete cubes measuring 150 x 150 x 150 mm in size.

A total of ninety cubes were produced from the thirty mix ratios given in Table 3.1, three cubes from each mix. The first set of 45 cubes made from first set of fifteen mix ratios, were used in formulating the final optimization model, while the second set of 45 cubes from the second set of fifteen mix ratios, were used as control test for validating the optimization model .The concrete cubes were cured in water for 28 days, and tested in compression thereafter. The compression load at failure were recorded and used in Eqn (3.7) to determine the compressive strength of the Sawdust Ash-Cement concrete and presented in Table 4.9:

$$\text{Compressive strength} = \frac{compressive\ load\ of\ cube\ at\ failure\ (N)}{cross\ sectional\ area\ of\ mould\ (mm^2)} \qquad (3.7)$$

3.5 Analytical Method

The neural network toolbox MATLAB Version 6.5 was used in the analysis. The toolbox was used to build the current neural network model. Neural network algorithms in MATLAB Version 6.5 could quickly be implemented, and large-scale problems tested conveniently. The ANN toolbox enabled modeling the problem using back propagation ANN, radial ANN and recurrent ANN with a wide range of transfer functions, learning techniques, network architectures, performance optimization and performance functions.

3.5.1 Artificial Neural Network (ANN) Modeling of the Compressive strength of Sawdust Ash-Cement concrete

Artificial neural network mapped the various values of input to their corresponding targets. In this study, the back propagated network was used for the prediction of the compressive strength of Sawdust Ash-Cement concrete and therefore optimizing compressive strength. All the input data was normalized using the 'MapminMax' function in the neural network tool box in the matlab programming software.

3.5.2 Selection of learning rate and momentum constant

The learning function used in this study is 'learngdm'. The rate of learning was kept constant at 0.2 all through the training while the momentum constant was kept at 0.9.

3.5.3 Training Algorithm

3.5.3.1 Training Strategy of the ANN Model

Feed forward back propagation neural network was used after the preprocessing of the data had been completed. Back propagation is the most successful and widely used in civil engineering applications

3.5.3.1.1 Steps in Training the Network

Data Scaling

The first step in training was the data scaling. Data scaling was an essential step for the network training. One of the reasons for preprocessing the

output data is that a sigmoid transfer function is usually used within the network. Upper and lower limits of output from a sigmoid transfer function are generally 1 and 0, respectively. Scaling of the inputs to the range (-1, +1) greatly improved the learning speed, as these values fell in the region of the sigmoid transfer function where the output is most sensitive to variations of the input value. It was therefore necessary to normalize the input and output data before presenting them to the network. In this work a linear scaling data was used. A simple linear normalization function within the values of zero to one is as given in Equation (3.8) :

$$S = \frac{(P - P_{min})}{(P_{max} - P_{min})} \qquad (3.8)$$

Where S is the normalized value of the variable P, min P and max P are variable minimum and maximum values, respectively.

The function premnmx can be used to scale inputs and targets so that they fall in the range (-1, 1). The following code illustrates the use of this function.

(Pn,minP,maxP,tn,min t,max t) = premnmx (P,t); (3.9)

net = train(net, Pn, tn) (3.10)

The original network inputs and targets are given in the matrices P and t, respectively.

The normalized inputs and targets, Pn and tn, that are returned will all fall in the interval (-1, 1). The vectors minP and max P contain the minimum and maximum values of the original inputs, and the vectors min t and max t contain the minimum and maximum values of the original targets. After the network had been trained, these vectors were used to transform any future

inputs that were applied to the network. They effectively became a part of the network, just like the network weights and biases

The second step in training a feed forward network was to create the network object. The function created a feed forward network.
It required four inputs and returns the network object. The first input was an R by 2 matrix of minimum and maximum values for each of the R elements of the input vector. The second input was an array containing the sizes of each layer.
The third input was a cell array containing the names of the transfer functions that were used in each layer. The final input contained the name of the training function were used.

The third step *was* the setting of the training parameters:
a- The number of 'epochs' (number of times that the whole set of patterns was presented to the network) which affected the performance of the network. This number depended on many factors, of which the following were the most important:

(i)Number of training data,
(ii) Number of hidden layers,
(iii)Number of neurons in hidden layers,

(iv)Number of dependent output parameters
b - Maximum permissible error.
c- The number of iterations for which the error became constant.
d-The training status was displayed for every shown iteration of the algorithm

Back propagation algorithm in MATLAB Version 6.5 recommended dividing the data set into three sets, viz: training, validation and testing sets. Its desktop environment invites exploration, experimentation and discovery. The training set was used to gradually reduce the ANN error. The error on the validation set was monitored during the training process. The validation set error decreased during the initial phase of training, just as the training set error did.

However, when the network began to over-fit the data, the error on the validation set will typically began to rise. As the validation set error increased for a specified number of epochs, the training was stopped. The test set was used as a further check for the generalization of the ANN, but did not have any effect on the training.

The final step *was the* plotting of the training progress and the correlation coefficient "r"

Like its counterpart in the biological nervous system, the network could learn and therefore was trained to find solutions, recognize patterns, classify data, and forecast future events .This enabled it to automatically sort variables into categories.

Fig 3.1 presents a flow chart showing the training process of the artificial neural networks.

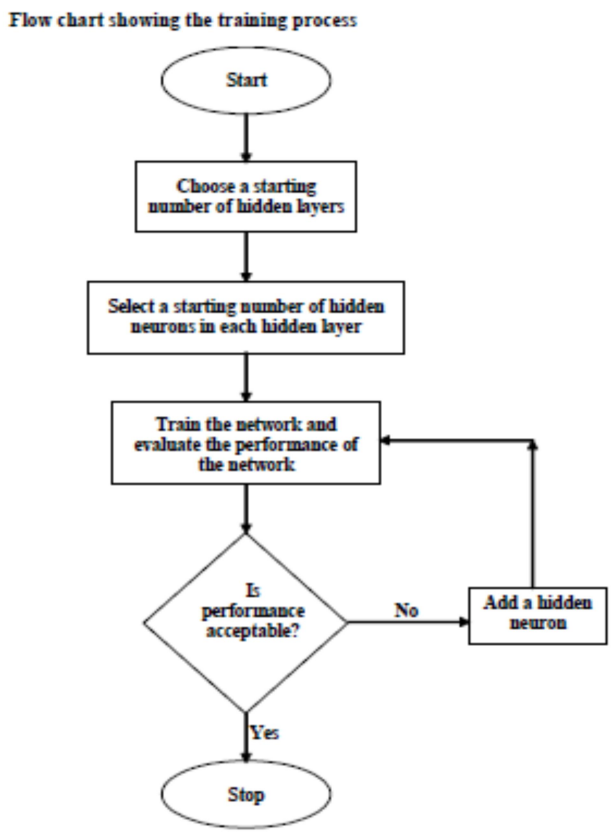

Fig3.1: Flow chart showing the training process (Mathworks 1999)

In Fig 3.1, as the number of neurons in first hidden layer increased or there was no change in performance, the new (second) hidden layer was added.

3.5.4 Architecture of the network

The network consisted of three layers namely: the input layer, the hidden layer and the output layer. The input layer consists of five (5) neurons corresponding to the five composite single input cement, water, saw dust ash, sand and aggregates. The hidden layer has twenty Neurons. The target function is the sigmoid transfer function. This function helped the network to learn the non linear relationship between the input data and the output data. See Table 3.2

Table 3.2 Modeling data

Training Algorithm	Function	Network Architecture	Training Data	Validating Data	Testing Data
Back-propagation	TANSIG	5 - 20 - 1	350	75	75

3.5.5 Selection of Training Data

Selection of training data is an important stage in training a neural network. In preparing the training data set, the data should cover a range for which the predictions should be made. The network should be provided with enough data to enable it learn the required pattern very well. If much data is presented to the network, it will over fit and would only give the results corresponding to the values it was provided with and therefore not make any good prediction. In this study, out of the initial 1000 training data set presented to the network, 500 data set were selected; out of which 350 were used for training of the network, 75 for validation and 75 for testing of the network. This division was achieved by the use of the 'dividrand' function.

The training set were used to adjust the weight on the network, the validation set were used to estimate how well the model had been trained(to minimize overfitting and overtraining), and the testing data were used to evaluate how well the learning algorithm worked as a whole.

CHAPTER FOUR
RESULTS AND DISCUSSION

4.1 Results

This chapter presents and discusses the results of various tests performed in this research work. The tests performed were as follows:

(i) Grain size distribution analysis of sharp river sand
(ii) Grain size distribution analysis of granite chippings aggregate
(iii) Determination of silt content on sharp river sand
(iv) Specific gravity test on sharp river sand and granite chippings
(v) Bulk density tests on sharp river sand and granite aggregate
(vi) Chemical analysis of Ordinary Portland Cement
(vii) Chemical analysis of saw dust ash cement
(viii) Slump test
(ix) Compressive strength test

4.1.1 Grain Size Distribution Analysis of Sharp River Sand

The result of particle size distribution of fine aggregate (sharp river sand) is as shown in Table 4.1.

The mass percentage retained was calculated using the Equation (4.1)

$$\text{Mass retained percentage} = \frac{\text{Mass retained x 100}}{\text{Initial mass}} \quad (4.1)$$

and

$$Percentage\text{passing } 100 - \text{ Percentage mass retained} \quad (4.2)$$

Table 4.1: Grain size distribution of sharp river sand

Sieve size (mm)	Weight of sieves (kg)	Weight of sieves and sample (kg)	Weight of sample retained (kg)	Weight of sample passing (kg)	Percentage retained (%)	Percentage passing (%)	Cumulative percentage retained (%)
4.75	0.45	0.45	0.00	0.5	0.00	100.00	0.00
3.5	0.45	0.50	0.05	0.45	10.00	90.00	10.00
2.00	0.45	0.52	0.07	0.38	14.00	76.00	24.00
1.18	0.55	0.60	0.05	0.33	10.10	66.00	34.00
0.60	0.50	0.60	0.10	0.23	20.10	46.00	54.00
0.425	0.37	0.45	0.08	0.15	16.00	30.00	70.00
0.30	0.35	0.40	0.05	0.10	10.00	20.00	80.00
0.212	0.30	0.35	0.05	0.05	10.00	10.00	90.00
0.15	0.32	0.35	0.03	0.02	6.00	4.00	96.00
Pan	0.28	0.30	0.02	0.00	4.00	0.00	100.00

The percentage passing was plotted against the sizes of the sieve so as obtain the grading curve shown in Fig. 4.1.

From the grading curve shown in Fig 4.1 below, uniformity coefficient, C_u and coefficient of gradation, C_c which is used as part of unified soil classification for granite was calculated with the following equations.

$$C_U = \frac{D_{60}}{D_{10}} \quad (4.3)$$

$$C_C = \frac{D^2{}_{30}}{D_{10} X D_{60}} \quad (4.4)$$

Where C_C = coefficient of uniformity

D_{60} = sieve size at 60% passing = 1.055

D_{10} = sieve size at 10% passing = (effective size) = 0.212

D_{30} = sieve size at 30% passing = 0.425

The value of C_u , calculated is 4.95;this shows that the fine aggregate is well graded.The value of C_c obtained is 0.81 showing that the sand is well

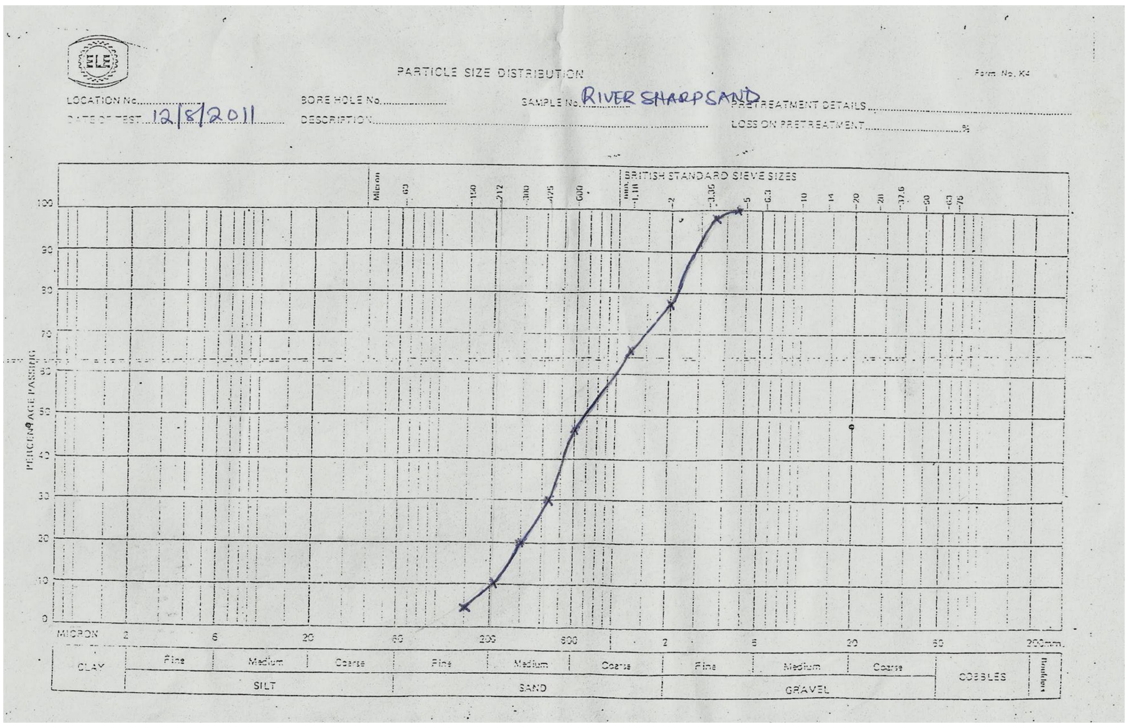

Fig. 4.1: Grading Curve of River sand

4.1.2 Grain Size Distribution of Coarse Aggregate (Granite Chippings)

The result of sieve analysis of granite aggregate is presented in Table 4.2.

Table 4.2: Result of Sieve Analysis on Granite Chipping

Sieve size (mm)	Mass retained (g)	% Mass retained (%)	Cumulative mass retained	Percentage cumulative mass retained	% Passing
19	0.00	0.00	0.00	0.00	10.00
16	225	22.5	225	22.5	75.50
12.5	400	40	625	62.5	37.5
11.2	150	15	775	77.5	22.5
9.5	80	8	885	85.5	14.50
6.3	125	12.5	980	98	2.0
4.75	20	2	1000	100	0
Pan	0	0	1000	100	-

A grading curve showing the sieve sizes and percentage of sample passing the sieves aperture is plotted as shown in Fig. 4.2.

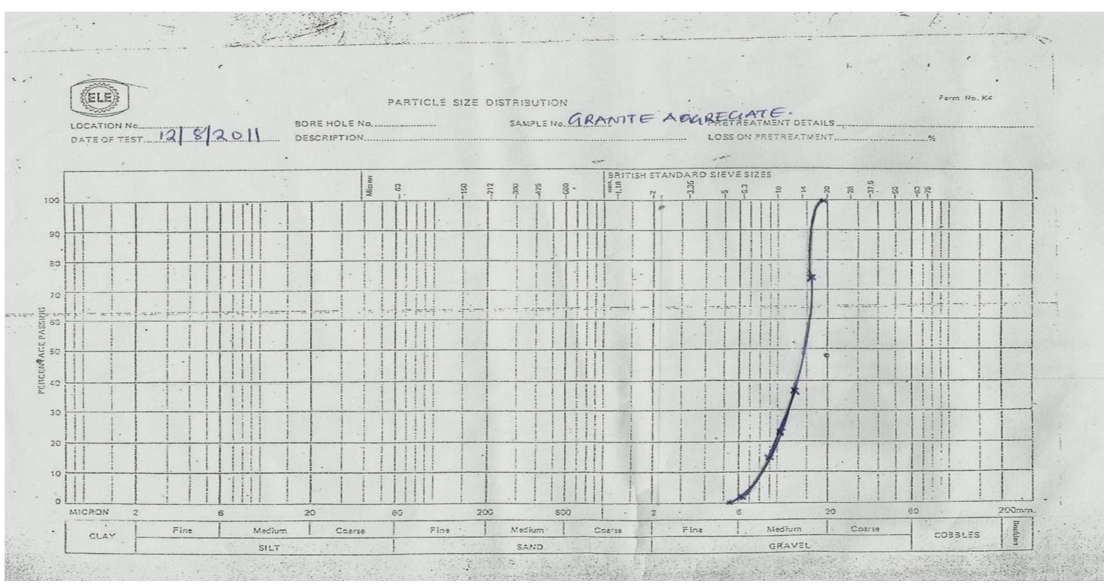

Fig 4.2: A Grading Curve for Granite Chipping

From the grading curve shown in Fig 4.2, uniformity coefficient, C_u and coefficient of gradation, C_c which are used as part of unified soil classification for granite were calculated using Equations (4.3) and (4.4).

where

C_u = coefficient of uniformity

D_{60} = sieve size at 60% passing = 16

D_{10} = sieve size at 10% passing (effective size) = 8.15

D_{30} = sieve size at 30% passing = 11.0

C_u on substitution becomes 1.96; this shows that the granite aggregate is well graded.

C_c on substitution becomes 0.93; this shows that coarse aggregate is partly uniform.

4.1.3 Determination of Silt Content of Sharp River Sand Used

The result of percentage of silt content of river sand is presented in Table 4.3.

Table 4.3: Results of silt content determination on sharp river sand

Description	**Quantity**
Sand layer	372ml
Silt layer	12ml
Silt content in percentage	3.2%

From the results in Table 4.3, the silt content of the sand used in this research, is low and as such it shows that the sand, has enough void space that can be filled up by the binder (cement) to form a strong cohesive mass and serve as a good construction material.

4.1.4 Results of Specific Gravity Test on Sharp River Sand

Specific gravity is a measure of material's relative density; BS 812 (1969) recommended that specific gravity should be between the range of 2.3 and 3.0 for the purpose of mix design. The Table 4.4a below shows the specific gravity test results of granite chipping aggregate.

Table 4.4a: Specific Gravity of Granite

Bottle No	**A**	**B**	**C**
Mass of bottle + sample + water M_3 (g)	1331	1322	1335
Mass of bottle+ Sample M_2(g)	607	610	608
Mass of bottle full of water only M_4 (g)	1195	1196	1206
Mass of bottle M_1(g)	407	410	408
Mass of water used ($M_2 - M_1$) (g)	724	712	727
Volume of sample used ($M_3 - M_2$) (g)	200	200	200
Volume of sample ($M_4 - M_1$) – ($M_3 - M_2$) ml	64	74	71

The Specific gravities of the three samples were calculated as follow using the Equation (3.2)

$$GS = \frac{(M_2 - M_1)}{(M_4 - M_1) - (M_3 - M_2)}$$

(i) GS(A)=2.667

(ii) GS(B)=3.389

(iii) GS (C)=2.89

$$\text{Average GS} = \frac{2.667+3.389+2.89}{3} = 2.98$$

Hence specific gravity (GS) = 2.98

This value of the specific gravity is within the recommended range for aggregate, and thus could be used for mix design of concrete.

Table 4.4b: Specific Gravity of Sharp River Sand

Bottle No	A	B	C
Mass of bottle + sample + water M_3 (g)	1331	1322	1335
Mass of bottle+ Sample M_2(g)	607	610	608
Mass of bottle full of water only M_4 (g)	1195	1196	1206
Mass of bottle M_1(g)	407	410	408
Mass of water used ($M_2 - M_1$) (g)	724	712	727
Volume of sample used ($M_3 - M_2$) (g)	200	200	200
Volume of sample ($M_4 - M_1$) – ($M_3 - M_2$) ml	64	74	71

The Specific gravities of the three samples were calculated as follow using the Equation (3.2)

$$GS = \frac{(M_2 - M_1)}{(M_4 - M_1) - (M_3 - M_2)}$$

(i) GS(A)=3.125

(ii) GS(B)=2.705

(iii) GS (C)=2.817

Average GS = $\frac{3.125+2.70+2.817}{3} = 2.88$

Hence specific gravity (GS) = 2.88

This value of the specific gravity is within the recommended range for aggregate, and thus could be used for mix design of concrete.

4.1.5 Bulk Density of Aggregates

The bulk densities of fine and coarse aggregate are determined as follows.

(a) Fine Aggregate

Bulk density = $\left(\frac{M_2 - M_1}{V}\right)\ kg/m^3$

where M_2 = Mass of mould + mass of wet sand (kg) = 9.587kg

M_1 = mass of mould (kg) = 1.223kg

V = Volume of mould = 0.00326m^3

Bulk density = $\left(\frac{9.587-1.223}{0.00326}\right) = 2.565.64kg/m^3$

(b) Coarse Aggregate

M_2 = Mass of mould + Granite = 9.805kg

M_1 = Mass of mould = 1.223kg and Volume of mould = 0.00326m^3

Bulk Density = $\frac{9.805-1.223}{0.00326} = 2,632.5kg/m^3$

From the calculations above, it can be observed that the bulk density of fine and coarse aggregate, used were 2565.64 and 2632.5kg/m^3 respectively.

4.1.6 Chemical and physical Properties of Cement and Saw-dust ash

The chemical and physical analyses of Ordinary Portland Cement and saw-dust ash used in this work are as shown in sections 4.1.6.1, 4.1.6.2 and 4.1.6.3.

4.1.6.1Physical and chemical Results of Ordinary Portland Cement

The results of physical analysis of Ordinary Portland Cement are as shown in Table 4.6a, while that of the chemical analysis are as shown in Table 4.6b.

Table 4.6a: Physical Properties of Ordinary Portland Cement

Properties	**Values**
Moisture content	0.003
Specific gravity	3.15
Fineness	190 plus
pH	9.2

Table 4.6b: Chemical Composition of Ordinary Portland Cement

S/No	Oxides	Mass Fraction
1	Silicate (SiO_2)	20.39
2	Alumina (Al_2O_3)	6.03
3	Lime (CaO)	67.62
4	Magnesium oxide (MgO)	1.31
5	Iron oxide	2.29
6	Potassium oxide (K_2O)	0.84
7	Sodium oxide (Na_2O)	0.30
8	Titanium oxide (TiO_2)	0.20
9	Loss on ignition	2.80
	Total	98.98

4.1.8.2 Chemical Composition of Sawdust Ash-Cement in Percentage

The chemical composition of the sawdust ash used in this work is as shown in Table 4.7.

Table 4.7: Chemical Composition of Sawdust Ash Cement.

S/No	Oxides	% Fraction of oxides
1	SiO_2	67.2
2	Al_2O_3	4.1
3	Fe_2O_3	2.3
4	CaO	10.0
5	MgO	5.8
6	K_2O	0.1
7	SO_2	0.5
8	P_2O_5	0.5
9	MnO	0.01
10	Na_2O	0.1
	Total	**90.61**

4.1.8.3 Pozzolanic Activity Index (PAI) Of the Sawdust-ash

ASTM (18 - 98) and Indian standards recommend that Silicon, aluminum and iron oxide compositions of pozzolanic material, should add up to a minimum value of 70%. The sum of the main oxides of sawdust ash used in this work i.e, SiO_2 + Al_2O_3 and Fe_2O_3 compositions approximately adds up to 73.6% thus pozzolanic activity index (PAI) of sawdust ash-cement ,is 73.6% which is higher than the minimum recommended by ASTM for pozzolana. This implies that the material is a good pozzolana.

4.1.7 Workability

The results of the workability of fresh concrete are determined by slump test for the mix proportions at different percentages of replacement of Ordinary Portland Cement with sawdust ash cement. This is shown in Table 4.1.

Table 4.1: Results of workability on Fresh Concrete (Slump test)

Mix No.	Sawdust Ash (g)	Slump time (sec)	Slump value (mm)	Type of slump
N_1	52.258	10	10.5	True
N_2	119.118	10	25	True
N_3	165.306	10	12	True
N_4	272.260	10	50	True
N_5	221.311	10	30	True
N_{12}	83.505	10	30	True
N_{13}	102.208	10	50	True

N_{14}	147.214	10	40	True
N_{15}	144.914	10	30	True
N_{23}	135.906	10	35	True
N_{24}	190.588	10	160	Collapse
N_{25}	177.743	10	35	True
N_{34}	201.780	10	30	True
N_{35}	187.826	10	25	True
N_{45}	241.390	10	15	True

It can be observed from Table 4.1, that all the slump values are true except for the mix ratio with observation point N_{24}, which is more workable than the rest. This could be attributed to excess water as compared to the other mixes for the other observation points.

4.1.9 Compressive Strength

The compressive loads given in Newton for 28-day old concrete cubes are tabulated in Table 4.8. The compressive strengths for the 28-day old concrete cubes were computed using the Equation (3.7)

$$\text{Compressive strength} = \frac{\text{Compressive load at failure (N)}}{\text{Cross-sectional area of cube (mm}^2\text{)}} \qquad (4.5)$$

Where Cross-sectional area of cube = 150 x 150 = 22,500mm^2

The results obtained using the equations are shown in Table 4.9.

Table 4.8: Compressive Loads in Newton (N)

S/No	Replicate 1 (N)	Replicate 2 (N)	Replicate 3 (N)	Mean compressive load (N)
N_1	465,000	450,000	460,000	458,330
N_2	440,000	435,000	430,000	435,000
N_3	475,000	470,000	400,000	448,000
N_4	300,000	270,000	350,000	307,000

N_5	260,000	210,000	250,000	240,000
N_{12}	410,000	450,000	465,000	442,000
N_{13}	310,000	310,000	300,000	307,000
N_{14}	370,000	240,000	380,000	330,000
N_{15}	195,000	210,000	210,000	205,000
N_{23}	480,000	350,000	360,000	397,000
N_{24}	350,000	360,000	300,000	367,000
N_{25}	330,000	360,000	280,000	323,000
N_{34}	310,000	340,000	260,000	303,000
N_{35}	330,000	320,000	370,000	340,000
N_{45}	450,000	410,000	390,000	417,000
C_1	393,000	400,000	380,000	394,000
C_2	304,815	350,000	340,000	331,625
C_3	357,750	345,000	378,000	360,225
C_4	380,000	340,000	390,375	370,125
C_5	356,250	290,000	310,000	318,750
C_{12}	310,000	350,000	330,000	330,000
C_{13}	410,000	385,000	361,950	385,650
C_{14}	280,000	300,000	259,025	279,675
C_{15}	378,400	368,000	360,000	368,800
C_{23}	335,250	310,000	320,000	321,750
C_{24}	303,000	293,250	315,000	303,750
C_{25}	333,000	360,000	306,000	333,000
C_{34}	280,000	263,000	300,000	281,250
C_{35}	295,000	320,000	334,050	316,350
C_{45}	295,000	280,000	310,000	295,000

Table 4.9: Compressive strength in N/mm^2 of 28 day old concrete cubes

S/No	**Replicate 1**	**Replicate 2**	**Replicate 3**	**Mean compressive strength**
N_1	20.69	20.00	20.44	20.34
N_2	19.56	19.33	19.11	19.30
N_3	18.44	18.22	17.78	18.13
N_4	13.33	12.00	15.56	14.45
N_5	11.55	9.33	11.11	11.33
N_{12}	18.22	20.00	20.66	19.63

N_{13}	13.78	13.78	13.33	13.63
N_{14}	16.44	10.67	16.89	16.67
N_{15}	8.66	9.33	9.33	9.11
N_{23}	21.33	15.56	16.00	17.66
N_{24}	15.56	16.00	13.30	15.78
N_{25}	14.67	16.00	8.89	15.34
N_{34}	13.78	15.11	11.58	13.48
N_{35}	14.67	14.22	16.44	15.10
N_{45}	20.00	18.22	17.78	18.67
C_1	17.47	18.08	16.89	17.48
C_2	13.55	15.56	15.11	14.74
C_3	15.90	15.33	16.80	16.01
C_4	16.89	15.11	17.35	16.45
C_5	15.83	12.89	13.78	14.17
C_{12}	13.78	15.56	14.67	14.67
C_{13}	18.22	17.11	16.09	17.14
C_{14}	12.44	13.33	11.51	12.43
C_{15}	16.82	16.36	16.00	16.39
C_{23}	14.90	13.78	14.22	14.30
C_{24}	13.47	13.03	14.00	13.50
C_{25}	14.80	16.00	13.60	14.80
C_{34}	12.44	11.72	13.33	12.50
C_{35}	13.11	14.22	14.85	14.06
C_{45}	13.11	12.44	13.78	13.11

4.1.10 Validation of Network Performance

The Fig 4.3 shows a regression plot between network outputs and network targets. The 'R' value is an indication of the relationship between the outputs and targets. For this study, the training data set has an 'R' value of 0.97853, the validation data set has an 'R' value of 0.97753 and the test data set has an 'R' value of 0.98084. All the network targets and inputs have an 'R' value of 0.97868 which is greater than 0.9. Therefore it can be

concluded that data used for training the network, have a good fit.

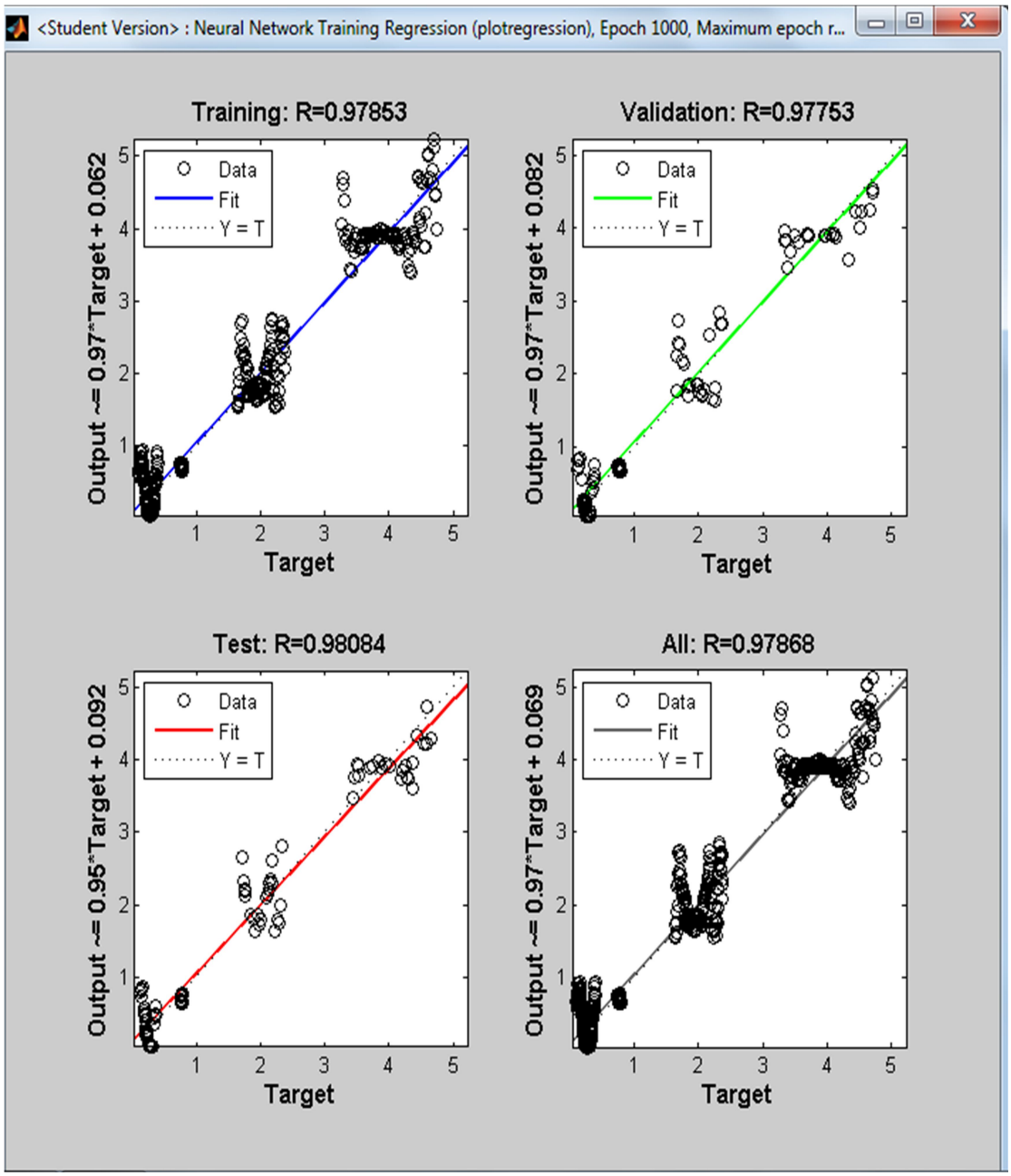

Fig. 4.3: Regression plot of the network targets and output

The best performance occurred at 0.09285 for epoch 1000 as shown in Fig

4.4.

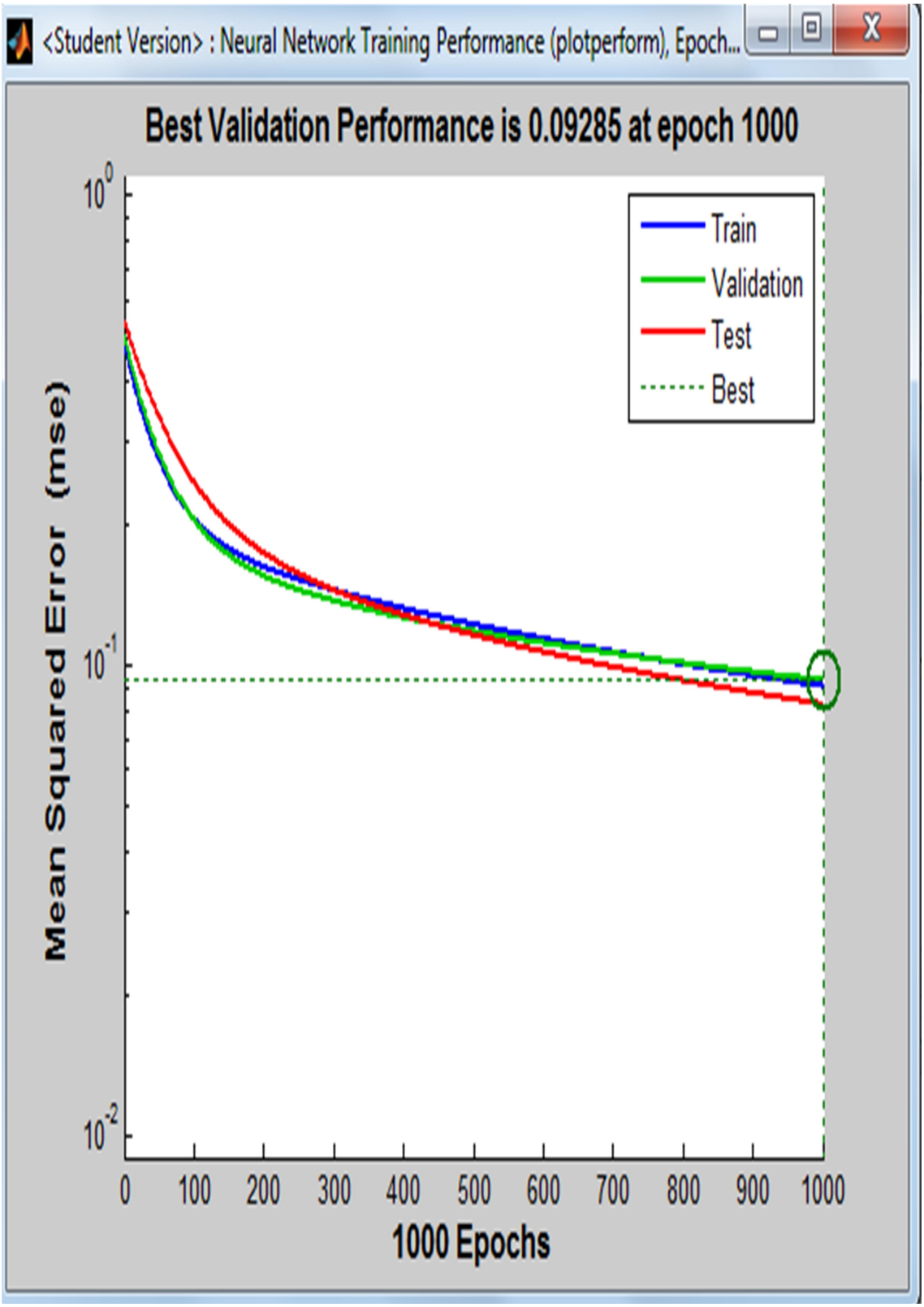

Fig.4.4 'msreg' error convergence history.

The gradient at epoch 1000 is 0.067371 and is shown in Fig 4.5.

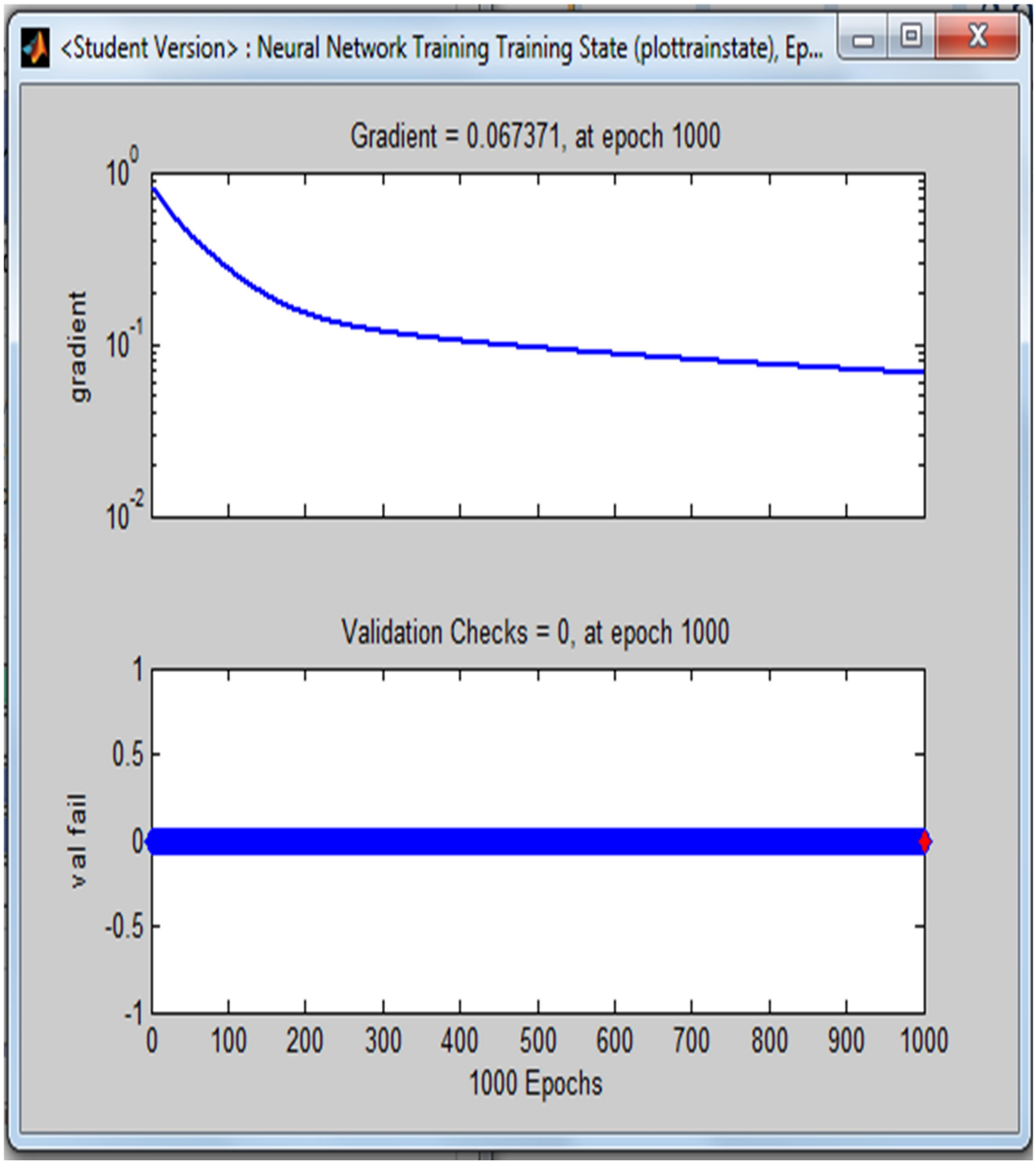

Fig 4.5. Training State Of The Network.

4.2 Discussion of Results

4.2.1 Comparison of Predicted and Experimental values.

The results of predicted values of the Compressive Strength of concrete and that of the experimental values can be seen in Table 4.10.

Table 4.10: Compressive Strength Test Results and Neural Network Predictions.

Mix label	Experimental Result (KN/m^2)	Neural Network Prediction (KN/m^2)
N_1	20.34	20.301
N_2	19.30	19.22
N_3	18.13	18.141
N_4	14.45	14.43
N_5	11.33	11.32
N_{12}	19.63	19.64
N_{13}	13.63	13.65
N_{14}	16.67	16.68
N_{15}	9.11	9.12
N_{23}	17.66	17.66
N_{24}	15.78	15.99
N_{25}	15.34	15.34
N_{34}	13.48	13.48
N_{35}	15.10	15.15
N_{24}	18.67	18.66

A further comparison of these results with their percentage errors is seen in Table 4.11.

Table 4.11: Comparison of Experimental Results and. Neural Network Predictions and Percentage Errors.

Mix label	Experimental Result (ex)	Neural Network Prediction (N.P)	Error (ex – N.P)	%Error
N_1	20.34	20.301	0.0390	0.0019
N_2	19.30	19.22	0.0800	0.4145
N_3	18.13	18.141	-0.0110	0.0601
N_4	14.45	14.43	0.0200	0.1384
N_5	11.33	11.32	0.0100	0.0883
N_{12}	19.63	19.64	-0.0100	0.0509
N_{13}	13.63	13.65	-0.0200	0.1467
N_{14}	16.67	16.68	-0.0100	0.0600
N_{15}	9.11	9.12	-0.010	0.1098
N_{23}	17.66	17.66	0.0000	0
N_{24}	15.78	15.99	-0.210	0.1331
N_{25}	15.34	15.34	0.0000	0.0000
N_{34}	13.48	13.48	0.0000	0.0000
N_{35}	15.10	15.15	0.0500	0.3311
N_{24}	18.67	18.66	0.0100	0.0536

The modeling and simulation of the neural network with the data obtained historically in this investigation have produced considerably encouraging results. The differences in results have been given in percentage errors as shown Table 4.12. The highest percentage error is 0.4145. The high values of percentage error obtained, could be as a result of experimental errors encountered during the compression test of the

prototype concrete cubes. Some of the network outputs, are plotted against their corresponding experimental values in bar chart format. This yield the bar graph in Fig 4.6 and the line graph in Fig 4.7.

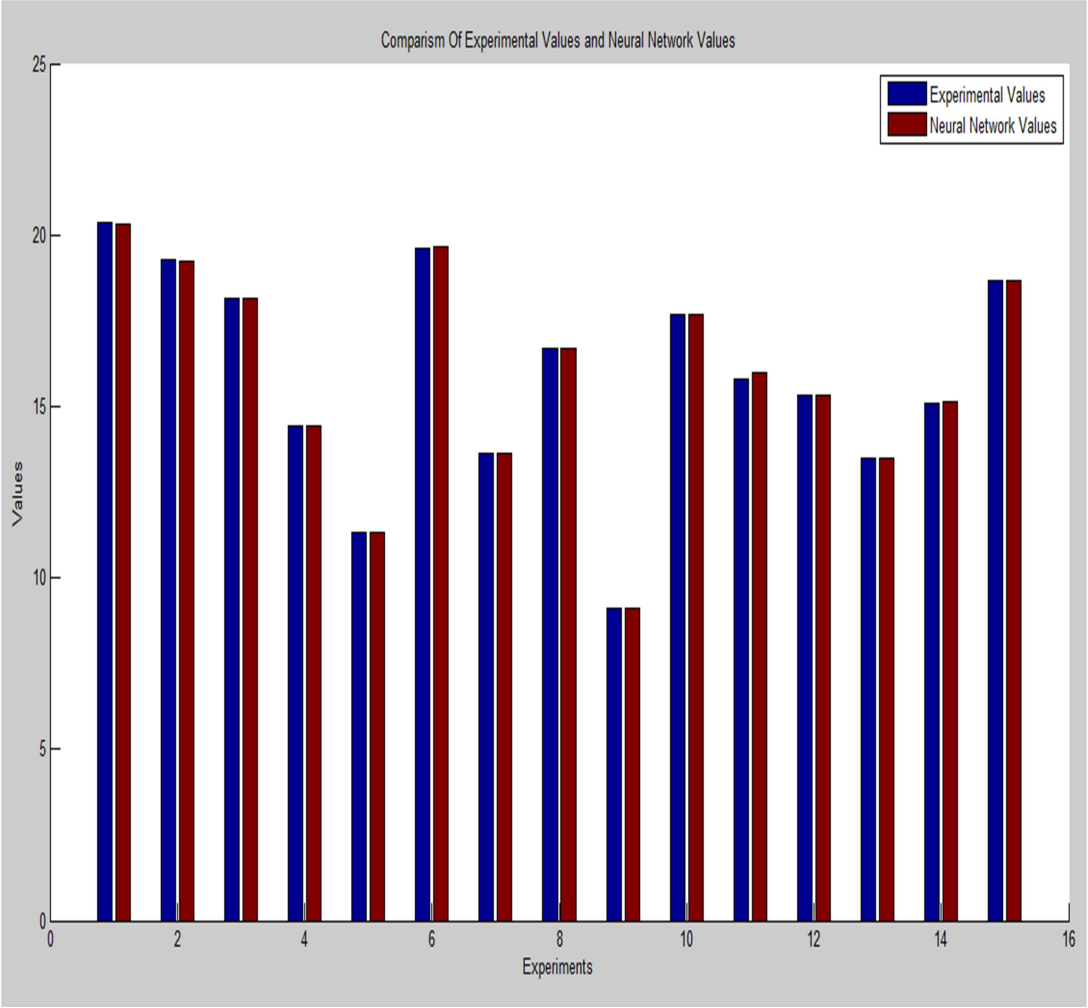

Fig. 4.6: Bar Chart Comparison of Experimental Values and Neural Network Predictions

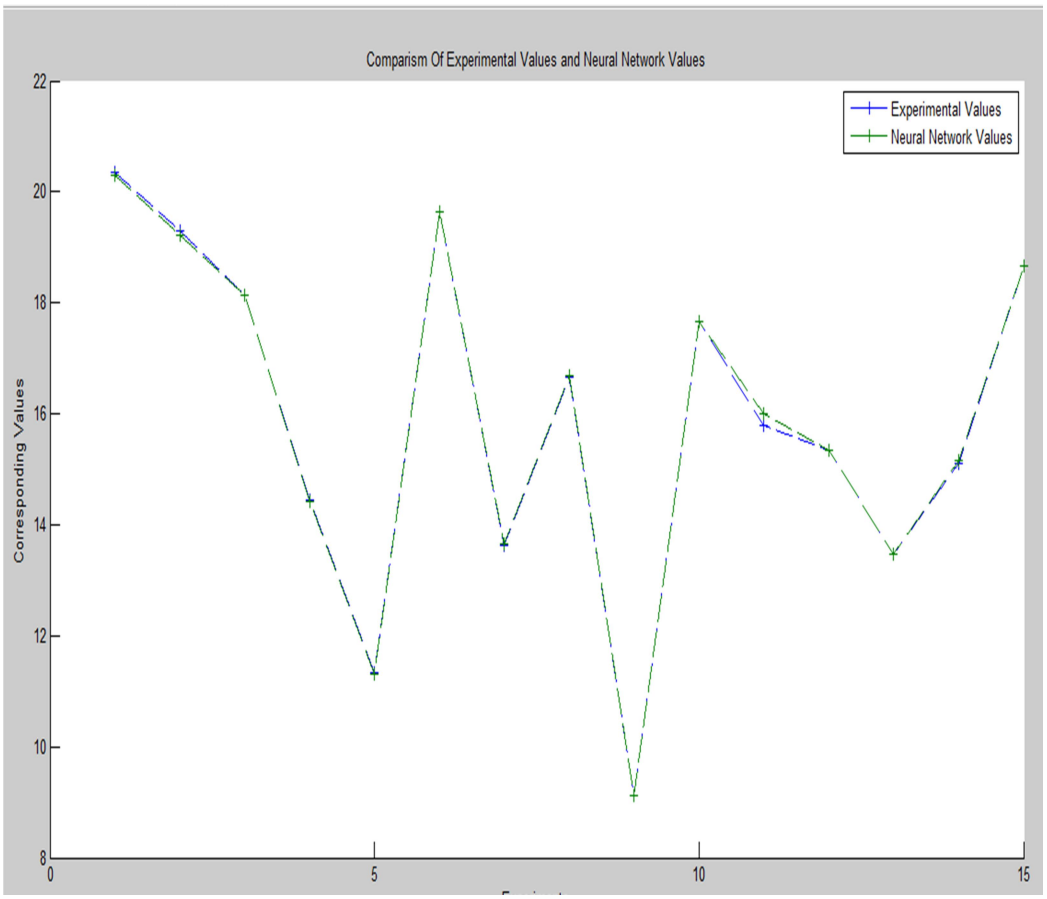

Fig 4.7: Line Graph comparison of Neural Network Prediction and Experimental values.

4.2.2 The Training Window

During training, the progress is constantly updated in the training window. Of most interest, are the performance, the magnitude of the gradient of performance and the number of 'validation checks. The magnitude of the gradient and the number of validation checks, are used to terminate the training. The gradient becomes very small as the training reaches a minimum performance. The number of validation checks represents the number of successive iterations that performance value fails to decrease as shown in Fig.4.8

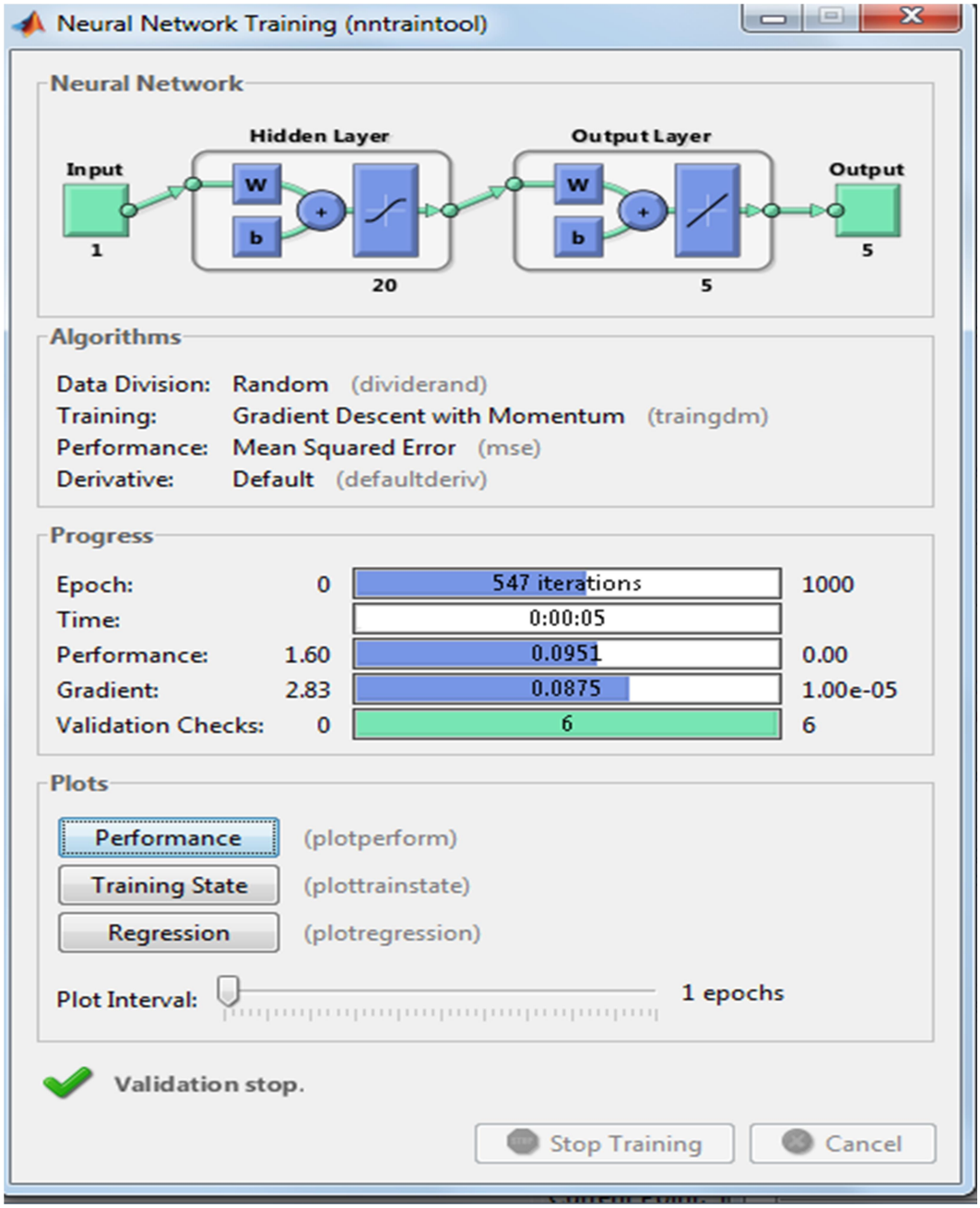

Fig 4.8: Training Window of the Network (Architecture of the ANN)

4.2.3 Test For Adequacy of the Neural Network Model.

The Neural Network model was tested for adequacy using the controlled experimental results. It will be recalled that Statistical Hypotheses are as follows;

(i) Null Hypothesis (Ho): There is no significant difference between the experimental and the theoretically expected results at a significant level of 0.05.

(ii) Alternative Hypothesis (HJ): There is a significant difference between the experimental and theoretically expected results at a significance level of 0.05.

4.2.4 The Student's t -test

A two-tailed student's T- test was carried and the computations presented in table 4:12

Table 4.12. Statistical student's T-test for validation of the model

S/N	E_X	N_P	$D_i=(E_X-N_P)$	D_A-D_i	$(D_A-D_i)^2$
1	20.34	20.301	0.039	-0.0498	0.00248
2	19.30	19.22	0.08	-0.0908	0.008245
3	18.13	18.141	-0.011	0.0002	4E-08
4	14.45	14.43	0.02	-0.0308	0.000949
5	11.33	11.32	0.01	-0.0208	0.000433
6	19.63	19.64	-0.01	-0.0008	6.4E-07
7	13.63	13.65	-0.02	0.0092	8.46E-05
8	16.67	16.68	-0.01	-0.0008	6.4E-07
9	9.11	9.12	-0.01	-0.0008	6.4E-07
10	17.66	17.66	0	-0.0108	0.000117
11	15.78	15.99	-0.21	0.1992	0.039681
12	15.34	15.34	0	-0.0108	0.000117

13	13.48	13.48	0	-0.0108	0.000117
14	15.10	15.15	-0.05	0.0392	0.001537
15	18.67	18.66	0.01	-0.0208	0.000433

Where $\mathbf{E}_X$ = Experimental responses.

Np=Neural network model responses.

N = the Number of Responses = 15.

$\sum (D_i) = -0.162$

$\sum(D_A-D_i)^2 = 0.054192$

$D_A = \sum(D_i)/N = -0.162/15$

$D_A = -0.0108$

$S^2 = \sum (D_A-D_i)^2/(N-1) = 0.054192/14$

$=0.003871$

$S=\sqrt{S^2}=\sqrt{0.003871}=0.062216$

Compute~T-value

$T=D_A$ *(N) ^0.5/S = -0.6723

Degree of freedom = N-1

5% significance for a two-tailed test = 0.05

From standard statistical table, $T = T_{(0.05,\ n-1)} = T_{(0.05,14)} = 2.14$

It could be seen from the Table that the calculated T-value (i.e .T = -0.6723) from the predicted results is less than the standard T-value (i.e.T = 2.14) obtained from the tables given in appendix D. This implies that the null hypothesis (Ho) should be accepted while the alternative hypothesis should be rejected as there is no significant difference between the neural network results and the experimental results. This affirms that the results from the neural network model as obtained herein are reliable and the model could be used to predict the 28th day compressive strength of concrete at 95% confidence level.

CHAPTER FIVE

CONCLUSION AND RECOMMENDATION

5.1 Conclusions.

This research work concludes that the neural network models can be used to predict compressive strength of sawdust ash-cement concrete if mix ratios are known or vice versa.

The network was properly trained with experimental data in order to find the relationship between the input-output pattern .This enabled it to solve problems that are difficult to parametric methods and regression methods of optimization. Proportioning of five components of concrete mix involving the use of sawdust ash-cement for partial replacement of cement can be done with ease.

The network was tested for adequacy using statistical student's T-test at 5% significant level and was found to be adequate.

The results obtained using the neural network are comparable to the ones generated from the experimental works.

The percentage errors of experimental result with respect to the result obtained from neural network ranges from 0.00% to 0.4145%

The highest value of percentage error is 0.4145%. This may be due to error encountered during the casting and the compression test of the prototype concrete cubes.

5.2 Contributions to Knowledge

This research work, Prediction of compressive strength of Sawdust Ash-cement concrete using Artificial Neural Network method contributed the following to knowledge

(i) Provide artificial neural network interface for prediction of compressive Strength of Sawdust Ash-cement concrete

(ii) Proved that industrial waste; sawdust, can be processed and used as cementitious material for construction of light weight structures.

(iii) Provide information to engineers on the use of sawdust Ash for partial replacement of cement. Such information includes prediction of mix ratio of sawdust ash-cement concrete if compressive strength is known or vice versa.

5.3 Recommendations

The following recommendations are made based on the results of this research work.

(i) The neural network is adequate for optimization of compressive strength of sawdust ash–cement concrete. The network can be used to determine compressive strength sawdust ash-cement concrete given any mix ratio, and vice versa.

(ii) More investigations should be carried out on the use of neural network to predict other properties of sawdust ash-cement concrete such as flexural strength, shear modulus, elastic modulus, and modulus of rupture, etc.

(iii) More research should be done on the use of other artificial intelligent methods like Genetic Algorithm method, fuzzy-logic method, etc., to predict properties of sawdust ash-cement concrete.

REFERENCES

Adeli, H. (2001). 'Neural networks in civil engineering: 1989-2000.' Computer Aided Civil and Infrastructure Engineering, 16(2), 126-142

Anyanwu,C.(2011). 'Prediction of Compressive Strength of Sawdust Ash-Cement Using Scheffe's Simplex Theory'

Anyaogu, L. and Ezeh, J.C. (2013). 'Optimization of Compressive Strength of Fly Ash Blended Cement Concrete Using Scheffe's Simplex Theory'. SAVAP International Journal, vol.4(2)

Beale, M.H, Demuth, M.B, mathworks, (2004), 'Neural Network Toolbox for use with MATLAB': user Guide. Mathworks, Orlando.

Bhavikatti, S .S (2000).Elements of Civil Engineering .New Delhi: Vilcas Publishing House

Bonen, D (2001). 'Gypsum cement designed for construction material' A patented research paper, United States, Gypsum Company Chicago.

Braddock, R. D., Kremmer, M. L., and Sanzogni, L. (1998). 'Feed-forward artificial neural network model for forecasting rainfall run-off.' Environmetrics, 9, 419-432.

British Standards Institution (BS 598, 1985), Methods of determination of index properties of pitch-bitumen Binder, pp. 2-16, 1985

British Standards Institution (BS 812, 1975), 'Methods of determination of mechanical properties of aggregate', 1995, Part 3, p. 4-8.

Breiman, L. (1994). Comment on 'Neural networks': A review from a statistical by B. Cheng and D. M. Titterington." Statistical Science, 9(1), 38-42.

Brown, M., and Harris, C. J. (1994). 'Neurofuzzy adaptive modeling and control', Prentice-Hall, Englewood Cliffs, New Jersey.

Buntine, W. L., and Weigend, A. S. (1991). 'Bayesian back-propagation.' Complex Systems, 5, 603-643.

Burke, L. I., and Ignizio, J. P. (1992). 'Neural networks and operations research: An overview.' Computer and Operations Research, 19(3/4), 179-189.

Cai, S., Toral, H., Qiu, J., and Archer, J. S. (1994). 'Neural network based objective flow regime identification in air-water two phase flow.' Canadian Journal of Chemical Engineering, 72, 440-445.

Cal, Y. (1995). 'Soil classification by Neural network.' Advances in Engineering Software, 22(2), 95-97.

Chinneck, J.W (2007) 'Feasibility and infeasibility in Optimization: Algorithms and computational methods'. Springer science and business media, Carleton University Ottawa, Canada.

Dayholf J.(1990). 'Neural Nenvorit architectures', springer Canada.

Dias, W and Pooliyadda, S. (2000) 'Neural Networks for Properties of Concretes with Admixtures'. Construction and Building Materials. Elsevier Science Ltd.

Elinwa, A.U. , Ejeh, S.P. and Akpabio, C.O. (2005). 'Using metakaolin to improve sawdust as concrete'. Concrete International 27,NO.11:49 – 52.

Elinwa, A.U. (2005).Unpublished lecture notes on concrete materials.

Elinwa, A.U. , Ejeh, S.P. and Mamuda, A.M. (2007). 'Assessing of the fresh concrete properties of self compacting concrete containing sawdust ash. Concrete building material Journal,vol 2.pp 1- 5.

Flood, I. (1991). 'A Gaussian-based neural network architecture and complementary training algorithm.' Proceedings of the International Joint Conference on Neural Networks, NewYork, 171-176.

Flood, I., and Kartam, N. (1994). 'Neural networks in civil engineering : Principles and understanding.' Journal of Computing in Civil Engineering, 8(2), 131-148.

Hagan, M.T., Demuth, H.B., Beal, M., (1996). 'Neural Network Design.' PWS publishing company, Boston.

Hagan, M .T. and Menhaj. M (1996). 'Training feedforword networks with the marguaratt algorithm'. IEEE Transactions on Neural networks vol. 5. No. 6.

Hong-Guang, N and Ji-Zong, W. (2000) 'Prediction of Compressive Strength of Concrete by Neural Networks'. Cement and Concrete Research. Elsevier Science Ltd.

Hopfield J.J,(1985). 'Neural Networks and Physical System with Emergent Collective Computational Abilities'. Proceedings of the natural Academy of sciences, vol 19,pp. 6.

Jenkins, W. (1998) 'A Neural Networks for Structural Re-analysis'. Computers and Structures. Elsevier Science Ltd.

Ippei,M., Manabu Kanemastu, Takafumu Noguchi and Fuminori Tomosawa(2000). 'Optimization of Mix Proportion of Concrete under various severe Conditions by applying Genetic' Algorithm.University of Tokoyo, Japan.

Kabir A. and Massan M.D (2011), 'Prediction of compressive strength of concrete for early age test result'. Conference paper at the 4th Annual paper meet, Dhaka.

Khurmi, R.S. and Grupts, J. K.(2006) 'Civil Engineering Materials'. New Delhi .Eurasia Publishing House.

Kirkegaard, P. H. and A. Rytter. 'Use of Neural Networks for Damage Detection and Location in a Steel Member'. Publication of the 3rd International Conference on the Application of Artificial Intelligence to Civil and Structural Engineering. CIVILCOMP93, Edinburgh, August 17-19,1993.

Kuennen C. (2006), 'Concrete products. Report on the use of granulated blast slag cement in construction'. vol. 103, Issues 7. p 130.

Kurup, P.U. (2002) 'Neural Networks for Profiling Stress History of Clays from PCPT Data'. Journal of Geotechnical and Geo environmental Engineering July/569-579.

Mandenhall, W. Beaver, R. J. and Beaver , B M(2003). 'Introduction To probability and Statistics'. 11th Edition USA:Brooks /Cole Thomson learning.

MathWorks Inc(1999). 'MATLAB, the language of technical computing'. Natick, MA, USA: MathWorks Inc;.Version 6.5.

McClelland, J.K and Rumelhart ,M.(1998). Parallel distributed proceedings: Exploration in the micro structure of cognition vol.1,pp5-7 MIT press Cambridge mass.

Murdock, L.J and Brook K.M (1979). 'Concrete material and practice'. 5th Edition. Edward Amold publisher Ltd London.

Neil, J, (1996) 'Civil Engineering Materials'. 5th Edition Macmillian press Ltd, Hong Kong.

Neville A. M., 'Properties of concrete', Pearson Education Asia Pte ltd, Edingburg, Scotland, pp. 108-176, 1995.

Nwaogazie, I. L.(1996).'Probability and Statistics For Science and Engineering Practice'. Lagos:Print Konzults.

Onwuka, D.O., Anyaogu, L., Chijioke, C. and Okoye, P.C.(2013). 'Prediction and Optimization of Compressive Strength of Sawdust Ash-Cement Concrete using Scheffe's Simplex Design'. International Journal of Scientific and Research Publications, Vol.3(5)

Olotoye F.A(2010). 'Investigations on Sawdust and Palm kernel shells as Aggregate Replacement' ARPN Journal of Engineering and Applied Science,Vol.5 (4)pp 6– 18.

Opara C.and Anyaogu L. (2016). 'Concrete mix ratios data from past experimental works', Civil Engineering department FUTO'. Unpublished note.

Oreta, W.C. (2003) 'Neural Network Modeling of Confined Compressive Strength and Strain of Circular Concrete Columns'. Journal of Structural Engineering April/554-561

Osadebe,N. N.(2003). Lecture note on 'Generalized Mathematical Modelling of Compressive Strength of Normal Concrete as a Multi-varient Function of the Properties of its Constituents'.

Oyenuga, V.O. (2003). 'Simplified Reinforced concrete design', A Computer based approach 2nd Edition. Asros Ltd Lagos.

Rumelhart,M,Hinton,G.E,and Willians,R.S(1986), 'Learning representation by back propagating errors' nature vol. 323, pp 533-536.

Sarat, K.O. and Aakshaya Kumar sabat.(2008). 'Using Neural Networks for Prediction of Some Properties of Fly Ash'. ESGE 13, 1-14.

Scheffe, H.(1958). 'Experiment with Mixtures'. Journal of Royal Statistics Society B, no 20:344-360.

Sharmin, R.,Ahmed M., Mohiaddin, A.,and Forhat, A.L .(2006). 'Replacement of substitute between blinding material and fine aggregates in water'. Techno press. USA

Shetty, M.S.(2005).Concrete Technology.New Delhi: Rejendra ravindra printers.

Simon, M. J.(2003). 'Concrete Mixture Optimization Using Statistical Method'. Concrete Technology.New Delhi: Rejendra ravindra printers.

Singh, P.(2008).Civil Engineering Materials.New Delhi:S.K Kataria and sons.

Shahin, M.A., Maier M, Jakasa M.B (2002) `Predicting Settlement of Shallow Foundations Using Neural Networks`. Journal of Geotechnical and Geo-environmental Engineering September,pg.785-793.

Shahin, M.A., Jakasa M.B, Maier M (2006) `Artificial Neural Network Applications in Geotechnical Engineering `. Australian Geomechanics . pp. 49-62

Uviasah, M. O. (1976), 'Properties of Palm kernel shells and Fibre as aggregates for making concrete' Unpublished Bachelor of Engineering Thesis, Department of Civil Engineering, University of Benin, Benin, Nigeria, 1976.

Uwe,B.(2010).Pozzolans:ToTreasure,http://Ferrocement.net/ferro/files/pozzolans.uwe.html(accessed 13th , January 2011).

White, S.R, Kessler (2001), 'Self-activated healing of delaminating damage in woven composites'. Self healing material journal. vol. 20 pp 235-246.

Yeh, I.C. (1998) `Modeling of Strength of High-Performance Concrete Using Artificial Neural Networks`. Cement and Concrete Research .September/1797-1808

APPENDIX A

Database used for the Training, Validating and Testing of the Network

(**Compressive strengths and Concrete Mix Ratios**)

C	Z1	Z2	Z3	Z4	Z5
14.550448	0.1060	0.7570	0.243	2.360	4.72
14.7458	0.1100	0.7575	0.2425	2.350	4.70

14.936528	0.1140	0.7580	0.2420	2.340	4.68
15.122632	0.1180	0.7585	0.2415	2.330	4.66
15.304112	0.1220	0.7590	0.2410	2.320	4.64
15.480968	0.1260	0.7595	0.2405	2.310	4.62
15.6532	0.130	0.760	0.240	2.30	4.60
15.820808	0.1340	0.7605	0.2395	2.290	4.58
15.983792	0.1380	0.7610	0.2390	2.280	4.56
16.142152	0.1420	0.7615	0.2385	2.270	4.54
16.295888	0.1460	0.7620	0.2380	2.260	4.52
16.445	0.1500	0.7625	0.2375	2.250	4.50
16.589488	0.1540	0.7630	0.2370	2.240	4.48
16.729352	0.1580	0.7635	0.2365	2.230	4.46
16.864592	0.1620	0.7640	0.2360	2.220	4.44
16.995208	0.1660	0.7645	0.2355	2.210	4.42
17.1212	0.170	0.765	0.235	2.20	4.40
17.242568	0.1740	0.7655	0.2345	2.190	4.38
17.359312	0.1780	0.7660	0.2340	2.180	4.36
17.471432	0.1820	0.7665	0.2335	2.170	4.34
17.578928	0.1860	0.7670	0.2330	2.160	4.32
17.6818	0.1900	0.7675	0.2325	2.150	4.30
17.780048	0.1940	0.7680	0.2320	2.140	4.28
17.873672	0.1980	0.7685	0.2315	2.130	4.26
17.962672	0.2020	0.7690	0.2310	2.120	4.24
18.047048	0.2060	0.7695	0.2305	2.110	4.22
18.1268	0.210	0.770	0.230	2.10	4.20
18.201928	0.2140	0.7705	0.2295	2.090	4.18
18.272432	0.2180	0.7710	0.2290	2.080	4.16
18.338312	0.2220	0.7715	0.2285	2.070	4.14
18.399568	0.2260	0.7720	0.2280	2.060	4.12
18.4562	0.2300	0.7725	0.2275	2.050	4.10
18.508208	0.2340	0.7730	0.2270	2.040	4.08
18.555592	0.2380	0.7735	0.2265	2.030	4.06

18.598352	0.2420	0.7740	0.2260	2.020	4.04
18.636488	0.2460	0.7745	0.2255	2.010	4.02
18.67	0.250	0.775	0.225	2.00	4.00
18.698888	0.2540	0.7755	0.2245	1.990	3.98
18.723152	0.2580	0.7760	0.2240	1.980	3.96
18.742792	0.2620	0.7765	0.2235	1.970	3.94
18.757808	0.2660	0.7770	0.2230	1.960	3.92
18.7682	0.2700	0.7775	0.2225	1.950	3.90
18.773968	0.2740	0.7780	0.2220	1.940	3.88
18.775112	0.2780	0.7785	0.2215	1.930	3.86
18.771632	0.2820	0.7790	0.2210	1.920	3.84
18.763528	0.2860	0.7795	0.2205	1.910	3.82
18.7508	0.290	0.780	0.220	1.90	3.80
18.733448	0.2940	0.7805	0.2195	1.890	3.78
18.711472	0.2980	0.7810	0.2190	1.880	3.76
18.684872	0.3020	0.7815	0.2185	1.870	3.74
18.653648	0.3060	0.7820	0.2180	1.860	3.72
18.6178	0.3100	0.7825	0.2175	1.850	3.70
18.577328	0.3140	0.7830	0.2170	1.840	3.68
18.532232	0.3180	0.7835	0.2165	1.830	3.66
18.482512	0.3220	0.7840	0.2160	1.820	3.64
18.428168	0.3260	0.7845	0.2155	1.810	3.62
18.3692	0.330	0.785	0.215	1.80	3.60
18.305608	0.3340	0.7855	0.2145	1.790	3.58
18.237392	0.3380	0.7860	0.2140	1.780	3.56
18.164552	0.3420	0.7865	0.2135	1.770	3.54
18.087088	0.3460	0.7870	0.2130	1.760	3.52
18.005	0.3500	0.7875	0.2125	1.750	3.50
17.918288	0.3540	0.7880	0.2120	1.740	3.48
17.826952	0.3580	0.7885	0.2115	1.730	3.46
17.730992	0.3620	0.7890	0.2110	1.720	3.44
17.630408	0.3660	0.7895	0.2105	1.710	3.42

17.5252	0.370	0.790	0.210	1.70	3.40
17.415368	0.3740	0.7905	0.2095	1.690	3.38
17.300912	0.3780	0.7910	0.2090	1.680	3.36
17.181832	0.3820	0.7915	0.2085	1.670	3.34
17.058128	0.3860	0.7920	0.2080	1.660	3.32
16.9298	0.3900	0.7925	0.2075	1.650	3.30
16.796848	0.3940	0.7930	0.2070	1.640	3.28
14.386532	0.1075	0.7505	0.2425	2.36	754.7325
14.582924	0.1115	0.7510	0.2420	2.35	754.7125
14.774692	0.1155	0.7515	0.2415	2.34	754.6925
14.961836	0.1195	0.7520	0.2410	2.3375	4.6725
15.144356	0.1235	0.7525	0.2405	2.32	754.6525
15.322252	0.1275	0.7530	0.2400	2.31	754.6325
15.495524	0.1315	0.7535	0.2395	2.30	754.6125
15.664172	0.1355	0.7540	0.2390	2.29	754.5925
15.828196	0.1395	0.7545	0.2385	2.28	754.5725
15.987596	0.1435	0.7550	0.2380	2.27	754.5525
16.142372	0.1475	0.7555	0.2375	2.26	754.5325
16.292524	0.1515	0.7560	0.2370	2.25	754.5125
16.438052	0.1555	0.7565	0.2365	2.24	754.4925
16.578956	0.1595	0.7570	0.2360	2.23	754.4725
16.715236	0.1635	0.7575	0.2355	2.22	754.4525
16.846892	0.1675	0.7580	0.2350	2.21	754.4325
16.973924	0.1715	0.7585	0.2345	2.20	754.4125
17.096332	0.1755	0.7590	0.2340	2.19	754.3925
17.214116	0.1795	0.7595	0.2335	2.18	754.3725
17.327276	0.1835	0.7600	0.2330	2.17	754.3525
17.435812	0.1875	0.7605	0.2325	2.16	754.3325
17.539724	0.1915	0.7610	0.2320	2.15	754.3125
17.639012	0.1955	0.7615	0.2315	2.14	754.2925
17.733676	0.1995	0.7620	0.2310	2.13	754.2725
17.823716	0.2035	0.7625	0.2305	2.12	754.2525

17.909132	0.2075	0.7630	0.2300	2.11754.2325
17.989924	0.2115	0.7635	0.2295	2.10754.2125
18.066092	0.2155	0.7640	0.2290	2.09754.1925
18.137636	0.2195	0.7645	0.2285	2.08754.1725
18.204556	0.2235	0.7650	0.2280	2.07754.1525
18.266852	0.2275	0.7655	0.2275	2.06754.1325
18.324524	0.2315	0.7660	0.2270	2.05754.1125
18.377572	0.2355	0.7665	0.2265	2.04754.0925
18.425996	0.2395	0.7670	0.2260	2.03754.0725
18.469796	0.2435	0.7675	0.2255	2.02754.0525
18.508972	0.2475	0.7680	0.2250	2.01754.0325
18.543524	0.2515	0.7685	0.2245	2.00754.0125
18.573452	0.2555	0.7690	0.2240	1.99753.9925
18.598756	0.2595	0.7695	0.2235	1.98753.9725
18.619436	0.2635	0.7700	0.2230	1.97753.9525
18.635492	0.2675	0.7705	0.2225	1.96753.9325
18.646924	0.2715	0.7710	0.2220	1.95753.9125
18.653732	0.2755	0.7715	0.2215	1.94753.8925
18.655916	0.2795	0.7720	0.2210	1.93753.8725
18.653476	0.2835	0.7725	0.2205	1.92753.8525
18.646412	0.2875	0.7730	0.2200	1.9173.8325
18.634724	0.2915	0.7735	0.2195	1.90753.8125
18.618412	0.2955	0.7740	0.2190	1.89753.7925
18.597476	0.2995	0.7745	0.2185	1.88753.7725
18.571916	0.3035	0.7750	0.2180	1.87753.7525
18.541732	0.3075	0.7755	0.2175	1.86753.7325
18.506924	0.3115	0.7760	0.2170	1.85753.7125
18.467492	0.3155	0.7765	0.2165	1.84753.6925
18.423436	0.3195	0.7770	0.2160	1.83753.6725
18.374756	0.3235	0.7775	0.2155	1.82753.6525
18.321452	0.3275	0.7780	0.2150	1.81753.6325
18.263524	0.3315	0.7785	0.2145	1.80753.6125

18.200972	0.3355	0.7790	0.2140	1.79753.5925
18.133796	0.3395	0.7795	0.2135	1.78753.5725
18.061996	0.3435	0.7800	0.2130	1.77753.5525
17.985572	0.3475	0.7805	0.2125	1.76753.5325
17.904524	0.3515	0.7810	0.2120	1.75753.5125
17.818852	0.3555	0.7815	0.2115	1.74753.4925
17.728556	0.3595	0.7820	0.2110	1.73753.4725
17.633636	0.3635	0.7825	0.2105	1.72753.4525
17.534092	0.3675	0.7830	0.2100	1.71753.4325
17.429924	0.3715	0.7835	0.2095	1.70753.4125
17.321132	0.3755	0.7840	0.2090	1.69753.3925
17.207716	0.3795	0.7845	0.2085	1.68753.3725
17.089676	0.3835	0.7850	0.2080	1.67753.3525
16.967012	0.3875	0.7855	0.2075	1.66753.3325
16.839724	0.3915	0.7860	0.2070	1.65753.3125
16.707812	0.3955	0.7865	0.2065	1.64753.2925
16.571276	0.3995	0.7870	0.2060	1.63753.2725
14.224864	0.1090	0.7440	0.2420	2.37504.7450
14.422296	0.1130	0.7445	0.2415	2.36504.7250
14.615104	0.1170	0.7450	0.2410	2.35504.7050

APPENDIX B

Input Data for the Neural Network

(Mix Ratios from past experimental works)

input =[0.1060 0.7570 0.2430 2.360 4.72;0.1100 0.7575 0.2425 2.350 4.70;0.1140 0.7580 0.2420 2.340 4.68;0.1180 0.7585 0.2415 2.330 4.66;0.1220 0.7590 0.2410 2.320 4.64;0.1260 0.7595 0.2405 2.310 4.62;0.130 0.760 0.240 2.30 4.60;0.1340 0.7605 0.2395 2.290 4.58;0.1380 0.7610 0.2390 2.280 4.56;0.1420 0.7615 0.2385 2.270 4.54;0.1460 0.7620 0.2380 2.260 4.52;0.1500 0.7625 0.2375 2.250 4.50;0.1540 0.7630 0.2370 2.240 4.48;0.1580 0.7635 0.2365 2.230 4.46;0.1620 0.7640 0.2360 2.220 4.44;0.1660 0.7645 0.2355 2.210 4.42;0.170 0.765 0.235 2.20 4.40;0.1740 0.7655 0.2345 2.190 4.38;0.1780 0.7660 0.2340 2.180 4.36;0.1820 0.7665 0.2335 2.170 4.34;0.1860 0.7670 0.2330 2.160 4.32;0.1900 0.7675 0.2325 2.150 4.30;0.1940 0.7680 0.2320 2.140 4.28;0.1980 0.7685 0.2315 2.130 4.26;0.2020 0.7690 0.2310 2.120 4.24;0.2060 0.7695 0.2305 2.110 4.22;0.210 0.770 0.230 2.10 4.20;0.2140 0.7705 0.2295 2.090 4.18;0.2180 0.7710 0.2290 2.080 4.16;0.2220 0.7715 0.2285 2.070 4.14;0.2260 0.7720 0.2280 2.060 4.12;0.2300 0.7725 0.2275 2.050 4.10;0.2340 0.7730 0.2270 2.040 4.08;0.2380 0.7735 0.2265 2.030 4.06;0.2420 0.7740 0.2260 2.020 4.04;0.2460 0.7745 0.2255 2.010 4.02;0.250 0.775 0.225 2.00 4.00;0.2540 0.7755 0.2245 1.990 3.98;0.2580 0.7760 0.2240 1.980 3.96;0.2620 0.7765 0.2235 1.970 3.94;0.2660 0.7770 0.2230 1.960 3.92;0.2700 0.7775 0.2225 1.950 3.90;0.2740 0.7780 0.2220 1.940 3.88;0.2780 0.7785 0.2215 1.930 3.86;0.2820 0.7790 0.2210 1.920 3.84;0.2860 0.7795 0.2205 1.910 3.82;0.290 0.780 0.220 1.90 3.80;0.2940 0.7805 0.2195 1.890 3.78;0.2980 0.7810 0.2190 1.880 3.76;0.3020 0.7815 0.2185 1.870 3.74;0.3060 0.7820 0.2180 1.860 3.72;0.3100 0.7825 0.2175 1.850 3.70;0.3140 0.7830 0.2170

1.840 3.68;0.3180 0.7835 0.2165 1.830 3.66;0.3220 0.7840 0.2160 1.820 3.64;0.3260 0.7845 0.2155 1.810 3.62;0.330 0.785 0.215 1.80 3.60;0.3340 0.7855 0.2145 1.790 3.58;0.3380 0.7860 0.2140 1.780 3.56;0.3420 0.7865 0.2135 1.770 3.54;0.3460 0.7870 0.2130 1.760 3.52;0.3500 0.7875 0.2125 1.750 3.50;0.3540 0.7880 0.2120 1.740 3.48;0.3580 0.7885 0.2115 1.730 3.46;0.3620 0.7890 0.2110 1.720 3.44;0.3660 0.7895 0.2105 1.710 3.42;0.370 0.790 0.210 1.70 3.40;0.3740 0.7905 0.2095 1.690 3.38;0.3780 0.7910 0.2090 1.680 3.36;0.3820 0.7915 0.2085 1.670 3.34;0.3860 0.7920 0.2080 1.660 3.32;0.3900 0.7925 0.2075 1.650 3.30;0.3940 0.7930 0.2070 1.640 3.28;0.1075 0.7505 0.2425 2.3675 4.7325;0.1115 0.7510 0.2420 2.3575 4.7125;0.1155 0.7515 0.2415 2.3475 4.6925;0.1195 0.7520 0.2410 2.3375 4.6725;0.1235 0.7525 0.2405 2.3275 4.6525;0.1275 0.7530 0.2400 2.3175 4.6325;0.1315 0.7535 0.2395 2.3075 4.6125;0.1355 0.7540 0.2390 2.2975 4.5925;0.1395 0.7545 0.2385 2.2875 4.5725;0.1435 0.7550 0.2380 2.2775 4.5525;0.1475 0.7555 0.2375 2.2675 4.5325;0.1515 0.7560 0.2370 2.2575 4.5125;0.1555 0.7565 0.2365 2.2475 4.4925;0.1595 0.7570 0.2360 2.2375 4.4725;0.1635 0.7575 0.2355 2.2275 4.4525;0.1675 0.7580 0.2350 2.2175 4.4325;0.1715 0.7585 0.2345 2.2075 4.4125;0.1755 0.7590 0.2340 2.1975 4.3925;0.1795 0.7595 0.2335 2.1875 4.3725;0.1835 0.7600 0.2330 2.1775 4.3525;0.1875 0.7605 0.2325 2.1675 4.3325;0.1915 0.7610 0.2320 2.1575 4.3125;0.1955 0.7615 0.2315 2.1475 4.2925;0.1995 0.7620 0.2310 2.1375 4.2725;0.2035 0.7625 0.2305 2.1275 4.2525;0.2075 0.7630 0.2300 2.1175 4.2325;0.2115 0.7635 0.2295 2.1075 4.2125;0.2155 0.7640 0.2290 2.0975 4.1925;0.2195 0.7645 0.2285 2.0875 4.1725;0.2235 0.7650 0.2280 2.0775 4.1525;0.2275 0.7655 0.2275 2.0675 4.1325;0.2315 0.7660 0.2270 2.0575 4.1125;0.2355 0.7665 0.2265 2.0475 4.0925;0.2395 0.7670 0.2260 2.0375 4.0725;0.2435 0.7675 0.2255 2.0275 4.0525;0.2475 0.7680 0.2250

2.0175 4.0325;0.2515 0.7685 0.2245 2.0075 4.0125;0.2555 0.7690 0.2240
1.9975 3.9925;0.2595 0.7695 0.2235 1.9875 3.9725;0.2635 0.7700 0.2230
1.9775 3.9525;0.2675 0.7705 0.2225 1.9675 3.9325;0.2715 0.7710 0.2220
1.9575 3.9125;0.2755 0.7715 0.2215 1.9475 3.8925;0.2795 0.7720 0.2210
1.9375 3.8725;0.2835 0.7725 0.2205 1.9275 3.8525;0.2875 0.7730 0.2200
1.9175 3.8325;0.2915 0.7735 0.2195 1.9075 3.8125;0.2955 0.7740 0.2190
1.8975 3.7925;0.2995 0.7745 0.2185 1.8875 3.7725;0.3035 0.7750 0.2180
1.8775 3.7525;0.3075 0.7755 0.2175 1.8675 3.7325;0.3115 0.7760 0.2170
1.8575 3.7125;0.3155 0.7765 0.2165 1.8475 3.6925;0.3195 0.7770 0.2160
1.8375 3.6725;0.3235 0.7775 0.2155 1.8275 3.6525;0.3275 0.7780 0.2150
1.8175 3.6325;0.3315 0.7785 0.2145 1.8075 3.6125;0.3355 0.7790 0.2140
1.7975 3.5925;0.3395 0.7795 0.2135 1.7875 3.5725;0.3435 0.7800 0.2130
1.7775 3.5525;0.3475 0.7805 0.2125 1.7675 3.5325;0.3515 0.7810 0.2120
1.7575 3.5125;0.3555 0.7815 0.2115 1.7475 3.4925;0.3595 0.7820 0.2110
1.7375 3.4725;0.3635 0.7825 0.2105 1.7275 3.4525;0.3675 0.7830 0.2100
1.7175 3.4325;0.3715 0.7835 0.2095 1.7075 3.4125;0.3755 0.7840 0.2090
1.6975 3.3925;0.3795 0.7845 0.2085 1.6875 3.3725;0.3835 0.7850 0.2080
1.6775 3.3525;0.3875 0.7855 0.2075 1.6675 3.3325;0.3915 0.7860 0.2070
1.6575 3.3125;0.3955 0.7865 0.2065 1.6475 3.2925;0.3995 0.7870 0.2060
1.6375 3.2725;0.1090 0.7440 0.2420 2.3750 4.7450;0.1130 0.7445 0.2415
2.3650 4.7250;0.1170 0.7450 0.2410 2.3550 4.7050]

APPENDIX C

Output Data from the Neural Network

(Compressive Strength result obtained using the ANN)

targets=

[14.550448;14.7458;14.936528;15.122632;15.304112;15.480968;15.6532;15.820808;15.983792;16.142152;16.295888;16.445;16.589488;16.729352;16.864592;16.995208;17.1212;17.242568;17.359312;17.471432;17.578928;17.6818;17.780048;17.873672;17.962672;18.047048;18.1268;18.201928;18.272432;18.338312;18.399568;18.4562;18.508208;18.555592;18.598352;18.636488;18.67;18.698888;18.723152;18.742792;18.757808;18.7682;18.773968;18.775112;18.771632;18.763528;18.7508;18.733448;18.711472;18.684872;18.653648;18.6178;18.577328;18.532232;18.482512;18.428168;18.3692;18.305608;18.237392;18.164552;18.087088;18.005;17.918288;17.826952;17.730992;17.630408;17.5252;17.415368;17.300912;17.181832;17.058128;16.9298;16.796848;14.386532;14.582924;14.774692;14.961836;15.144356;15.322252;15.495524;15.664172;15.828196;15.987596;16.142372;16.292524;16.438052;16.578956;16.715236;16.846892;16.973924;17.096332;17.214116;17.327276;17.435812;17.539724;17.639012;17.733676;17.823716;17.909132;17.989924;18.066092;18.137636;18.204556;18.266852;18.324524;18.377572;18.425996;18.469796;18.508972;18.543524;18.573452;18.598756;18.619436;18.635492;18.646924;18.653732;18.655916;18.653476;18.646412;18.634724;18.618412;18.597476;18.571916;18.541732;18.506924;18.467492;18.423436;18.374756;18.321452;18.263524;18.200972;18.133796;18.061996;17.985572;17.904524;17.818852;17.728556;17.633636;17.534092;17.429924;17.321132;17.207716;17.089676;16.967012;16.839724;16.707812;16.571276;14.224864;14.422296;14.615104].

APPENDIX D

Percentage points of the distribution

(Statistical Table for Student T-test)

One tail	P= 0.05	0.025	0.005	0.0005
Two tail	P= 0.10	0.05	0.01	0.001
V =1	6.31	12.71	63.66	636.62
2	2.92	4.30	9.92	31.60
3	2.35	3.18	5.84	12.94
4	2.13	2.78	4.60	8.61
5	2.02	2.57	4.03	6.87
6	1.94	2.45	3.71	5.96
7	1.89	2.36	3.50	5.41
8	1.86	2.31	3.36	5.04
9	1.83	2.26	3.25	4.78
10	1.81	2.23	3.17	4.59
11	1.80	2.20	3.12	4.44
12	1.78	2.18	3.05	4.32
13	1.77	2.16	3.01	4.22
14	1.76	2.14	2.98	4.14
15	1.75	2.13	2.95	4.07
16	1.75	2.12	2.92	4.02
17	1.74	2.11	2.90	3.97
18	1.73	2.10	2.88	3.92
19	1.73	2.09	2.85	3.88
20	1.72	2.09	2.85	3.85
21	1.72	2.08	2.83	3.82

22	1.72	2.07	2.82	3.79
23	1.71	2.07	2.81	3.77
24	1.71	2.06	2.90	3.75
25	1.71	2.06	2.79	3.73
26	1.71	2.06	2.78	3.71
27	1.70	2.05	2.77	3.69
28	1.70	2.05	2.76	3.67
29	1.70	2.04	2.76	3.66
30	1.70	2.04	2.75	3.65
40	1.68	2.02	2.70	3.55
50	1.68	2.01	2.68	3.50
100	1.68	1.98	2.63	3.39
0	1.64	1.96	2.58	3.29