WASTE HEAT RECOVERY OF GAS-TO-LIQUIDS BY-PRODUCT STREAMS FOR POWER GENERATION

PRESENTED BY

JAIRUS IMO
REG. NO: (FUTO 05 MTECH/PET/005)

A THESIS SUBMITTED TO THE POST GRADUATE SCHOOL
FEDERAL UNIVERSITY OF TECHNOLOGY,
P.M.B. 1526 OWERRI, IMO STATE

MAY 2015

WASTE HEAT RECOVERY OF GAS-TO-LIQUIDS BY-PRODUCT STREAMS FOR POWER GENERATION

PRESENTED BY

JAIRUS IMO
REG. NO: (FUTO 05 MTECH/PET/005)

A THESIS SUBMITTED TO THE POST GRADUATE SCHOOL
FEDERAL UNIVERSITY OF TECHNOLOGY,
P.M.B. 1526 OWERRI, IMO STATE

IN PARTIAL FULFILMENT OF THE REQUIREMENTS FOR THE AWARD OF THE DEGREE, MASTER OF TECHNOLOGY,M.TECH IN PETROLEUM ENGINEERING

MAY 2015

CERTIFICATION

This is to certify that this thesis titled, "**Waste Heat Recovery of Gas-To-Liquids By-Product Streams for Power Generation**" was carried out by JAIRUS IMO, with registration number: **FUTO 05 MTECH/PET/005** in partial fulfilment of the requirements for the award of the degree Master of Technology (M.Tech.) in Petroleum Engineering Federal University of Technology, Owerri.

30/06/2015

Engr. (Dr) C.I.C Anyadiegwu **Date**

(Supervisor)

30/06/2015

Engr. (Dr) C.I.C Anyadiegwu **Date**

(HOD, Petroleum Engineering)

30/06/2015

Engr.(Prof.) E. E. Anyanwu **Date**

(Dean, SEET)

Engr. (Prof.) K. B. Oyoh **Date**

(Dean, Postgraduate School)

12-05-2015

Engr. (Prof.) Adewole Stephen **Date**

(External Examiner)

DEDICATION

This work is dedicated to Almighty God and my wonderful wife – Mrs. Charity Imo Jairus, whose unflinching support, faith and encouragement saw me through the program and helped me to achieve my goals.

ACKNOWLEDGEMENTS

I wish to acknowledge the following persons, who by one way or the other contributed to my success during this research work.

Prof. E.E. Anyanwu, Dean School of Engineering and Engineering Studies, Prof B. Obah, Dr. R.M.Aguta, Dr. C.I.C. Anyandiegwu, Staff of Post Graduate School, Staff of Chevron/Sasol GTL project Warri, Staff Of ADNOC Group UAE, my collegues and friends.

I am grateful my wife Charity Imo Jairus and to my children, Joy, Edidiong and Ehi Imo Jairus , my entire family for their supports and prayers. Finally, I would like to express my sincere thanks to God, the Faithful One, who gave me the assurance that saw me through this program.

ABSTRACT

The Gas-to-liquids (GTL) processes produce a large fraction of by-products whose disposal or handling ordinarily becomes a cost rather than benefit. As an alternative strategy to market stranded gas reserves, GTL provides middle distillates to an unsaturated global market and offers opportunities to generate power for commercial purposes from waste by-product streams, which normally are associated with increased expenses incurred from additional handling cost. The key concept investigated in this work is the possibility of integrating the GTL process with power generation using conventional waste by-product steam streams. Simulation of the integrated process was conducted with the aim of identifying the critical operating conditions for successful integration of the GTL and power generation processes. About 500 MW of electric power can be generated from 70% of the exit steam streams, with around 20 to 25% steam plant thermal efficiency. A detailed economic analysis on the LNG, stand-alone GTL, and Integrated GTL Power-Generation plants indicates that the integrated system is more profitable than the other options considered. Justifying the technology and economics involved in the use of the by-product streams to generate power could increase the net revenue and overall profitability of GTL projects. This technology may be transferable to GTL projects in the world, wherever a market for generated power exists.

Keywords:

Gas to liquid, Gas reserves, Power generation, Stranded Gas, Liquified Natural Gas (LNG).

TABLE OF CONTENTS

CHAPTER ONE: INTRODUCTION

CHAPTER TWO: LITERATURE REVIEW

ECONOMIC ANALYSES OF LNG, GTL & INTEGRATED GTL POWERGENERATION PROCESSES

CHAPTER FOUR: RESULTS AND DISCUSSION

CHAPTER FIVE: CONCLUSION AND RECOMMENDATIONS

LIST OF TABLES

LIST OF FIGURES

FIGURE Page

CHAPTER I

INTRODUCTION

1.1 Background

Natural gas is a clean, versatile and therefore desirable source of fuel. A strong factor that defines the mode of gas transportation or exploitation is the proximity to significant market. The volume of the global stranded gas is about 2,500 Tcf (about 250 billion BOE). {*Knott. 2002*}. Industry experts have projected a greater dependence on natural gas within the energy mix as time progresses. Natural gas plays an important role in meeting the energy requirements of the world. Large volumes of stranded gas are found globally, but these require considerable capital expenditure to bring the gas to market. Natural gas can be transported to customers by pipelines, if the natural gas source is near a significant market. Otherwise, when the market is remote, different natural gas exploitation options such as liquefied natural gas, chemical conversions into products, and gas by wire can be used to economically transport to desired markets.

The basis for the GTL conversion is the Fischer-Tropsch (FT) technology, which has been used to produce clean synthetic liquid fuels, mainly from coal, for more than half a century. {*Gas to Liquids, Shell Middle Distillate Synthesis Process 2002*} . GTL describes the catalytic process that involves the chemical conversion of natural gas (primarily methane) into liquid hydrocarbons–naphtha, diesel, and waxes.

A re-visited method for natural gas exploitation is the GTL technology, with most end products being useful as transportation fuels and base chemical

feedstock. The base stocks produced from GTL plants have very high saturates content with no impurities such as nitrogen and sulphur. Isomerisation of the highly paraffinic FT liquids into GTL fuels leaves no aromatics, so that gases are practically 100% isoparaffinic, which results in high cetane ratings.

The GTL processes have around 60% thermal efficiency, with the inefficiencies distributed between the steam and tail-gas streams. The combination of the two byproduct streams accounts for 40% heat losses within the GTL process; 17% of the heat loss is through the steam streams, while the remaining 23% is lost through the tail-gas stream. (Agee *et al.*1997) found that combination of the excess heat generated from the synthesis gas and FT synthesis reactions, and the tail-gas stream can provide sufficient electric power for both plant and commercial purposes. The balance between electric power and FT liquid production can be adjusted to meet market needs. They further stressed that the integration of the energy requirements within the GTL process is critical to an efficient plant design.

Several authors {*Agee et al.* 1997} have stressed the importance of energy integration within the GTL process. This work will validate and extend these observations by performing a rigorous economic and process analysis of the use of GTL ancillary products with no commercial value for power generation, which is an often-overlooked issue that could be important to determining the most attractive natural gas option. The GTL processes, though, are not pin-point selective, but produce a large fraction of by-

products whose disposal or handling ordinarily becomes a cost rather than benefit, a distinction which will be essential in this research. {Lepinski.2004}

The analyses in this project will present a robust, economic, process solution to natural gas exploitation, in terms of the technological and environmental factors scalable to supply-and-demand constraints. The stand-alone GTL process has been shown not to be profitable for some gas and oil prices. Integrating the GTL process with the power generation process will likely shift the economics in favor of the GTL process against the conventional refined crude oil, while delivering an efficient method to generate power from process wastes. Justifying the technology and economics involved in the use of byproduct streams for commercial power generation could increase the net revenue and overall profitability of the GTL projects. This technology may be transferable to other GTL projects in the world, wherever a market for the generated power exists.

1.2 Objectives of the Study

The primary purpose of this research effort is to develop a process model for the conversion of the heat content of GTL by-product (primarily steam) streams to electric power for commercial purposes. The project involves a conceptual design of an integrated GTL power-generation system, which can be deployed to optimize processing of stranded natural gas.

The second objective is to evaluate the economic feasibility of the use of the heat content of GTL by-product (primarily steam) streams for commercial power generation.

This involves evaluating the cost estimates and profitability of the project, which are key factors that determine successful deployment of the technology.

1.3 Statement of Problem

Prior studies have considered the extensive modeling of the GTL processes. The whole concept of the integrated GTL Power-generation system is based on ways to economically optimize the heat loss through the by-product streams - steam and tail-gas streams, for commercial power generation. More details of this cutting edge technology will be discussed in the literature review section.

Additionally, this work will clearly benchmark the profitability measures of the integrated GTL Power-generation plants against those of LNG and stand-alone GTL plants, and try to identify the most viable project based on these profitability measures.

Likewise, the whole integrated GTL Power-generation process will be modeled in an attempt to justify the assumptions for both the economic and process analyses, and to further strengthen the commercial nature of the power generated.

1.4 Justification of Study

With much gas flaring in different regions of the world especially in the African continent, and more in Nigeria, there is fervent need to monitised flare gas and convert it for power generation based on the assumption by the World bank that 60% of the total population and 90% of the rural household have no access to electricity, leading to a huge unexploited local market. And with little or no Independent power producer in some region, Nigeria economy stands a better

chance of benefiting from this project if properly harness and market created. Knowing that the current demand for power far exceed the total available generation capacity with a combine figure of less than 6000 MW as against 10000MW . It also compromised the effort of government in generating more power to the national grid and that will better the need for industrialization in Nigeria.

1.5 Scope of Study

This research will evaluate the possibility of monetizing stranded gas by creating a pathway for natural gas to meet market demand. It will involve developing a process model for the conversion of heat content of Gas to Liquid Technology through (Syngas Generation, Fischer-Tropsch Synthesis and Product Upgrade) and evaluating the economic feasibility of the use of heat content of GTL by-product stream for power generation by developing an annual cash flow for GTL, LNG and Integrated GTL using some specific economic assumptions and indicators (NPV, IRR, PI and Payback Period).

CHAPTER II

LITERATURE REVIEW

2.1 Natural Gas Options

The global proved gas reserves as at the end of 2008 is estimated to be about 6,437. Tcf, with a reserves-to-production ratio of 66.7.{Putting Energy in the sportlight-*BP Statistics Review of world Energy 2005*} Global trade in natural gas increased by 9% in 2008 while, transportation through pipeline grew by more than 10% within the same period. Shipments of LNG increased by 5.4% whereas, the first commercial GTL plant was scheduled to commence operations in the first quarter of 2006.

The global natural gas consumption increased by 3.3% in 2008 compared with an average of 2.3% over a 10-year period. With the exception of US, the gas consumption increased by 4% globally, and the largest increase were within Russia, China, and Middle East region. The world's largest gas market - US consumption did not increase because of growing gas prices and industrial restructuring. Generally, natural gas transportation via pipelines is the most cost-

effective, but pipeline transportation can only serve a small portion of the global natural gas transportation needs, since pipelines have economic and geographical limits.

2.1.1 Liquefied Natural Gas

Liquefaction is a physical process which involves a phase change from gas to liquids at a cryogenic temperature (about -260°F or -161°C) and atmospheric pressure. The volume after liquefaction reduces to 1/600th of the initial gas volume, which aids transportation of the liquefied gas to desired market. LNG is transported in specially built ships to a receiving terminal, where it is stored in heavily insulated tanks before being re-gasified from liquid to gas for industrial and domestic use. The whole supply chain for LNG includes: gas liquefaction, shipping, storage, and re-gasification.

However, while LNG accounts for 27% of all traded natural gas; the hydrocarbons used for LNG are dwarfed by the size of liquid middle distillates such as diesel and naphtha. Furthermore, LNG as traded today is strongly driven by long-term and high risk contractual agreements.

2.1.2 Gas-to-Liquids

Gas-to-liquids is a catalytic process which involves the chemical conversion of natural gas (primarily methane) into liquid hydrocarbons – naphtha, diesel, waxes. GTL is an appropriate option in natural gas exploitation, with the main end products being useful as transportation fuels and base chemical feedstock.

The base stocks produced from GTL plants have very high saturates content with no impurities such as nitrogen and sulphur. They have no aromatics due to the isomerisation of the highly paraffinic Fischer-Tropsch liquids into GTL fuels and are practically 100% iso-paraffinic, thus they have very high cetane ratings.

The GTL processes though, are not pin-point selective with a large fraction of byproducts,whose disposal or handling ordinarily becomes a cost rather than benefit, a distinction which will be essential in this work.

2.1.3 Compressed Natural Gas

Compressed natural gas (CNG) is a physical process which involves a compression of gas at operating pressures (between 1,500 to 2,500 psi) and low temperatures (between -40°F and 0°F). There are two technologies for CNG transport:- The Cran and Stennings technology, and the Enersea technology. {*Deshpande. and Economides. 2004*}. Just like LNG, CNG is transported in specially built ships to a receiving terminal, where it is stored or decompressed and offloaded to the pipeline distribution system.

2.1.4 Gas-to-Hydrates

Gas hydrates are clathrates or molecular "cages" that trap gas within a water-ice lattice. Hydrates are generally considered as a problem which needs to be avoided during production. The gas compression ratio of about 160:1

within the lattice could allow economic transportation of gas in this form, though the water fraction is 85% by weight. The production of hydrates slurry basically involves the mixing of chilled water and gas. Industrial production of gas hydrates involves feeding processed gas to a hydrate production plant, where series of reactors convert it into hydrate slurry. The reactors operate in series network and each reactor stage increases the concentration of the hydrate slurry. The concentrated hydrate slurry is stored and finally offloaded to a transport vessel. The hydrate is further dissociated at the receiving terminal, and the gas can be used as desired. The supply chain model of gas hydrates follows closely that of LNG model.

2.2 Dynamics of Product Supply & Demand

The main objective of each of the natural gas solutions is to monetize "stranded" gas reserves by creating pathways for the natural gas to a market where it has economic value. Currently, there is much gas flaring in different regions of the world especially in the African continent. In Nigeria alone, with about 187 Tcf remaining reserves split in almost equal halves between associated and non-associated gas reserves; about 40% of the associated gas produced is flared though gas flares are scheduled to stop by 2008.

2.2.1 LNG Global Market

There is a steady increase in the global LNG market with additional liquefaction and regasification capacities in the different regions of the world. The

additional capacities currently under construction will increase the global LNG liquefaction capacity from an estimated 6.6 Tcf (139 million metric tons) per year in 2003 to 9.4 Tcf (197 million metric tons) per year in 2007. Most of the additional LNG liquefaction capacities will be within the Atlantic basin region.

There is also a gradual increase in the demand for LNG, which has a direct relationship with the increasing global LNG liquefaction and re-gasification capacities. In 2002 only, twelve countries shipped 5.4 Tcf of natural gas (113 million tons of LNG) to twelve LNG importing countries, an increase from less than 4 Tcf (84 million tons) shipped in 1997. LNG-importing countries have a combined annual re-gasification capacity of 15.1 Tcf (310 million tons). {The *Global LNG Gas Market;Status and outlook final report 2003}*

Japan, South Korea and Taiwan, three LNG importing countries received 3.6 Tcf (76 million tons) in 2002, which represents about 68% of total global LNG trade, while ten European LNG importing countries and the United States received 1.7 Tcf (37 million tons) in 2002, representing 32% of total world LNG trade. In other regions, countries like Indonesia, Mexico, Philippines and a host of others have indicated their interest in the construction of receiving terminals.

The increase in the demand for natural gas globally is mainly for distributed power generation in the deregulated power market. The environmental and security concerns for perceived explosion risks at the

re-gasification facilities and for terrorist attacks on the LNG tanker are some of the key issues that may hinder LNG development.

2.2.2 GTL Global Market

Presently, the operating and announced GTL projects represent about one million bpd of new capacity, processing about 100 Bcf/D of natural gas. Only 227,500 bpd is operating; as shown in Table 2.1, which represents about 25% of the projected installed capacity. {*Davies. 2004*}

There could be a bright future for GTL technology in natural gas exploitation, with nearly half of the world gas reserves stranded and over 50% of this within the harsh offshore environment.

The abundance of gas resources, increasing price of crude and environmental issues, are some key factors shifting the focus of the oil & gas industry to the development of the GTL technology globally. The additional capacities will increase the volume of GTL trade in the coming years which leads to increased transportation of the "stranded" natural gas resources as refined fuel to market. Already, the announced GTL projects include some 700,000 bpd additional capacities.

Over the years, one of the key factors in the development of the GTL technology has

been the crude oil price. In most cases the price of GTL fuels is benchmarked against

global crude oil prices. The chemical nature of GTL fuels makes it more economically justified to benchmark their prices with cost of refined crude oil

rather than the crude oil prices. GTL is an end-product, and therefore all the costs of refining have to be fully

accounted for in the determination of price. {*Naha, et al. 2005*}.

Insufficient refining capacities in countries like the US also increase the global demand for GTL fuels. Basically, GTL as a product relieves pressure on the oil supplies that are pushing up transportation costs, while the main competition from LNG ultimately comes from the power generation market which has a number of alternatives.

Table 2.1-Global GTL Capacities	
GTL PROJECTS	**CAPACITIES(bpd)**
Operational	
Sasol I (South Africa)	8,000
Sasol II/III (South Africa)	160,000
PetroSA (South Africa)	47,000
Shell (Malaysia)	12,500
Construction	
Chevron (Nigeria)	34,000
Sasol/Qatar Petroleum	34,000
Announced	
Rentech (Bolivia)	10,000

Shell (Qatar)	140,000
ConocoPhillips (Qatar)	160,000
Syntroleum/Yakutgazprom (Russia)	13,000
Sasol/Chevron (Qatar)	66,000
Sasol/Chevron (Qatar)	130,000
Syntroleum/Marathon	90,000
Rentech (Indonesia)	16,000
Demonstration Plants	
BP (Alaska)	300
ConocoPhilips (Oklahoma)	400
Total (exclusive of demonstration plants)	**920,500**

2.2.3 Electric Power Profile – Case Study of Nigeria Local Market

In Nigeria, the current demand for power conservatively estimated as 10,000 MW far exceeds the total available generation capacity, which is about 2,500 MW, creating an imbalance in the dynamics of local demand and supply of power, as illustrated in Figure 2.1 {NEPA Market in Nigeria, Nigeria bureau of Public Enterprise 2003}.The installed capacity is about 5,900 MW, which is only 59% of the estimated suppressed demand for electricity.

World Bank estimates that about 60% of the total population and 90% of rural household have no access to electricity, leading to a very huge unexploited local market. Independent power producers (IPPs) are

generating only 60 MW altogether, representing about 2% and 0.6% of the available generation capacity and local power demand respectively. As at June 2002, Nigeria Electric Power Authority (NEPA) revenue customer base was about 3.05 million: 83% of which where residential, 16% commercial and 0.4% industrial.

Natural gas is the major fuel for electricity generation in Nigeria, and it accounts for close to 60% of the annual new power generation installed capacity. Hydroelectricity remains the main source of power in Nigeria, supplying over 50% of total electricity generated annually. However, concerns over the damming in the upper Niger, seasonal rainfalls and displacement of inhabitants due to damming activities are key issues which hinder the development of the hydroelectric power generation.

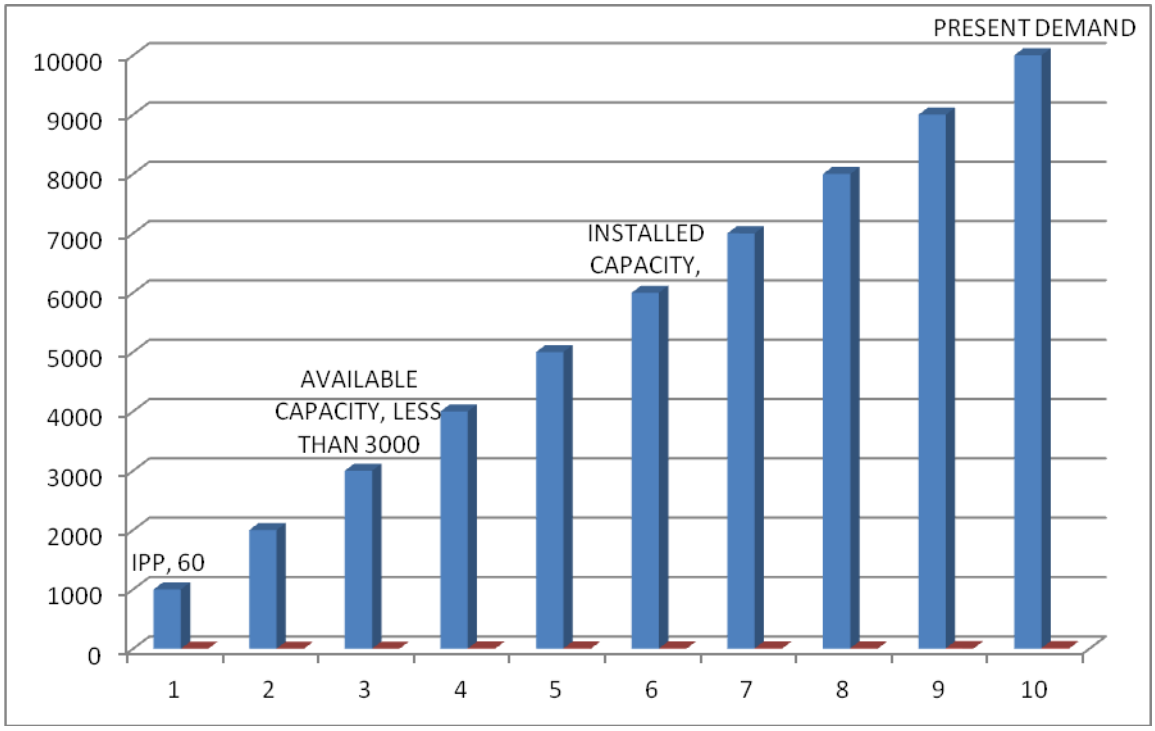

Figure 2.1-Nigerian Electric Power Capacity & Demand

Apart from countries with unsaturated local market for electric power, there is potential for countries with large gas reserves and saturated local market to export power to neighboring countries through established grid lines.

CHAPTER III

METHODOLOGY

INTEGRATED GTL POWER-GENERATION PROCESS

3.1 Design Plant Processes

Integrated GTL Power-Generation process involves the combination of commercial power generation with production of GTL fuels, based on existing GTL technology, using the heat content of the steam stream and/or the tail-gas stream.

The Integrated GTL Power-Generation process was modeled using a combination Aspen Plus, for the GTL process and Steam System Assessment Tool (DOE), for the power generation. The design of the integrated GTL Power-generation process using Aspen Plus software program is described below:

1. Articulate key design principles for the integrated GTL power-generation systems.

2. Develop a process model for the integrated GTL power-generation system by use of Aspen process modeling software suites.

3. Conduct a material and energy balance over the GTL loop within the integrated system to determine the following parameters.

- Inlet and outlet operating conditions (temperatures & pressures).
- Quantity of liquid products in the outlet streams.
- Quantity of steam generated in the outlet streams.

- Quantity of tail-gas stream in the outlet stream.

4. Conduct a material and energy balance over the power-generation loop to determine the following parameters.

- Efficiency of the thermal plants.
- Quantity and quality of inlet steam stream.
- Inlet operating temperature and pressure of the steam.
- Quantity of electric power supplied to the grid.

5. Conduct an overall material and energy balance over the integrated systems to

determine the efficiency of the system.

6. Analyze the output results from material and energy balances to isolate the factors

that favor the integrated GTL power-generation projects.

3.2 Aspen Process Simulation

Process simulation with Aspen Plus allows prediction of the behavior of a process using basic engineering relationships such as mass and energy balances, phase and chemical equilibrium, and reaction kinetics. Simulation of actual plant behavior can be achieved given reliable thermodynamic data, realistic operating conditions, and the rigorous Aspen Plus equipment models. {Aspen plus, 2001}.

Aspen Plus allows users to interactively change specifications, such as flowsheet configuration, operating conditions, and feed compositions, to run new cases and analyze alternatives. Aspen Plus allows users to perform a wide range of additional tasks, which

includes:

- Perform sensitivity analyses and case studies
- Generate custom graphical and tabular output
- Estimate and regress physical properties
- Fit simulation models to plant data
- Optimize plant processes

3.2.1 Material & Heat Balance Equations

The system of equations is linear; Aspen Plus solves the unknown variables directly,

while using material and energy balance equations:

3.3 Steam System Assessment Tool

The Steam System Assessment Tool (SSAT) is designed by the Department of Energy,

and it allows the development of approximate models of site steam system and prediction

of savings achieved from the implementation of key steam system best practices

measures. The key features of SSAT include:

- A choice of 1, 2, or 3 pressure header models
- Simulations of major equipment items including
  - Boiler
  - Back pressure turbines
  - Condensing turbine
  - Deaerator
  - Letdowns
  - Flash vessels
  - Feedwater preheat exchangers
  - Stream traps
- Schematic representation of the site steam system
- Estimates of site environmental emissions
- Calculations of project energy and operating cost savings

3.4 GTL Process Description

There are three stages involved in the conversion of natural gas into GTL fuels – Syngas generation, Fischer-Tropsch (FT) synthesis, and Product upgrade. A detailed result of the process modeling in Aspen Plus is included in Appendix B, while the actual process map is shown in Figure A1 in Appendix A and Figure 3.1 below.

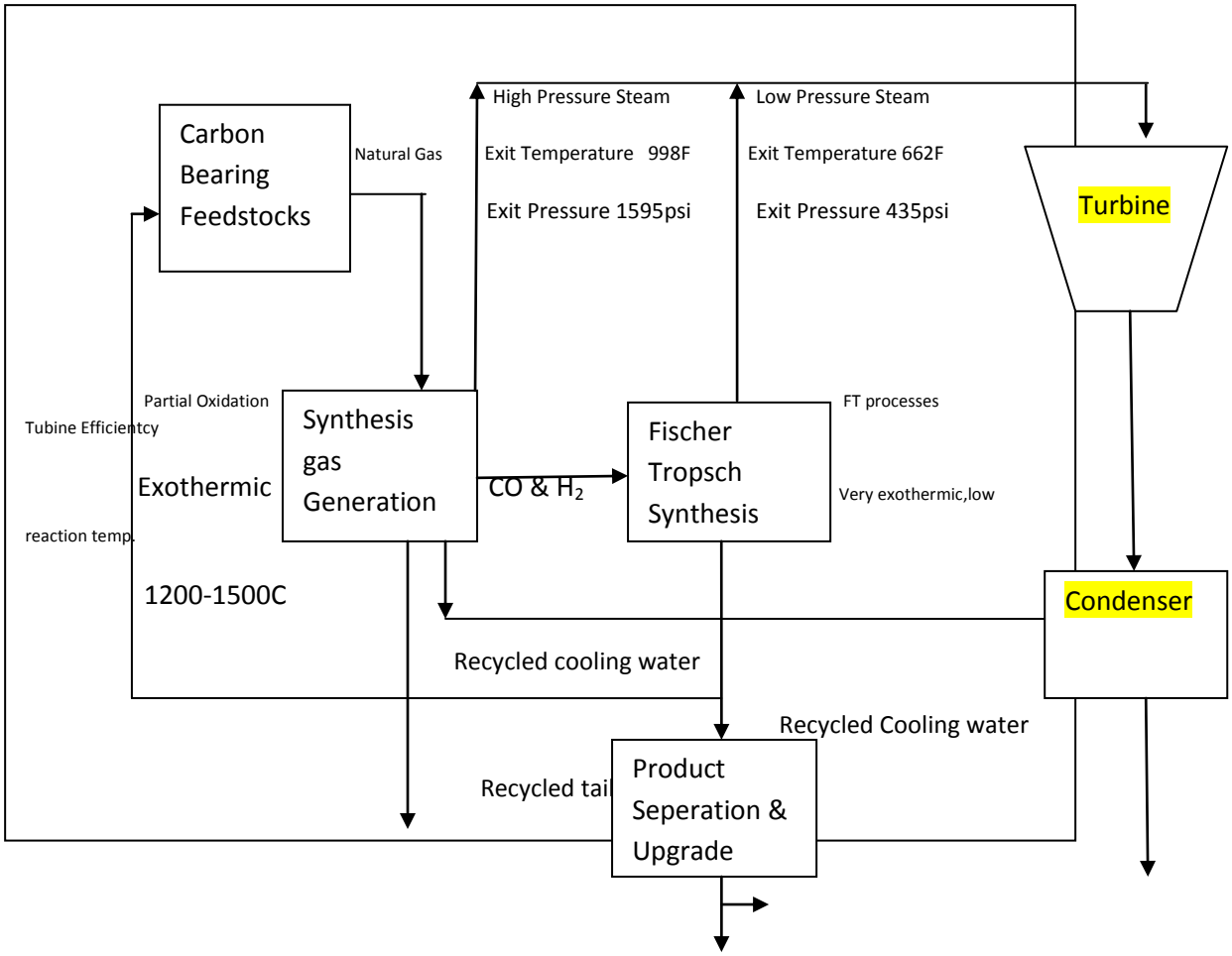

Figure 3.1-Overview of the Integrated GTL Power-Generation Process.

3.4.1 Pre-Feed Treatment

One Bscf/D of natural gas was fed into the pre-feed treatment. The impurities in the

methane-rich natural gas have to be removed before being fed into the syngas generation unit. These impurities include H_2S and CO_2; while the CO_2 remained within the feed gas inlet stream into the syngas generation unit, the H_2S is removed through stream 6. A component material balance of the methane-rich natural gas inlet and outlet streams within the Pre-feed treatment unit is shown under block B1 in Appendix B "U-O-S Block Section", while the inlet

and outlet streams are represented by streams 1, 2, & 6 in Appendix B "Stream Section".

3.4.2 Air-Separation Unit

The syngas generation route that was adopted in this work is the partial oxidation process route, which involves the oxidation of methane to produce CO and H_2. The oxygen required for the partial oxidation process is obtained by compressing air at 530^0F and 87 psi, separating into an oxygen-rich stream with about 0.5% nitrogen content. The Air- Separation unit has two components - compression and separation units represented by blocks B2 & B3 respectively, as shown in Figure A1, Appendix A. The inlet and outlet compressed air streams are represented by streams 4, 5, 7, & 8 in Figure A1, and Appendix B "Stream Section". The oxygen-rich stream represented by stream 7 is fed into the syngas generation unit.

3.4.3 Syngas Generation

Natural gas (primarily methane) is reacted with steam and/or oxygen to produce syngas, which is a mixture of hydrogen and carbon monoxide. The natural gas (predominantly methane) can be converted to syngas through three routes:

1. Partial oxidation: an exothermic process which involves an incomplete combustion of natural gas (primarily methane). The combustion chamber operates at a very high temperature (2,192–2,732^{0}F). {*Mian, 2002*} A side reaction occurs in which the CO_2 component in the inlet feed gas stream

reacts with CH_4 to produce additional hydrogen molecules. The chemistry of the two reactions are presented below:

$CH_4 + 0.5O_2$ _ $CO + 2H_2$ (1)

$CO_2 + CH_4$ _ $2CO + 2H_2$ (2)

2. Steam reforming: an endothermic process which involves the reaction of the natural gas with steam in the presence of catalyst. The process conditions are at a temperature of 1,562-1,724°F and pressure of 435 psia. {*Rahmim, 2003*}. The chemistry of the reaction is:

$CH_4 + H_2O$ _ $CO + 3H_2$ (3)

3. Authothermic reforming: an exothermic which combines steam reforming with partial oxidation. The authothermic reforming process utilizes the heat produced from the partial oxidation process to supply the required heat for steam reforming process.

In modeling the process in Aspen Plus, the "partial oxidation" route was adopted; critical to the decision was the necessity to maintain the stoichiometric ratio of $CO:H_2$ at 1:2. The exothermic nature of the partial oxidation process is one of the key issues which limit its applicability. One of the key advantages of the integrated process is that the high pressure steam stream is well-suited to generate power for commercial purposes.

The key assumption in the process modeling is that the carbon conversion was about 90%, which means that 10% of the feed-gas CH_4 stream exits the whole process unreacted. The carbon conversion in the primary reaction 1, shown above was assumed to be about 80%, while the secondary reaction 2, was taken as 10%. Consequently, enough O_2 sufficient to cause 80%

conversion of the feed-methane gas was supplied through stream 7 from the Air-Separation unit. The secondary reaction between the CO_2 in the feed-gas stream and CH_4 completes the methane conversion to meet the 90% conversion for the process.

Being very exothermic, the partial oxidation process was cooled from an exit temperature of about 2,372$_0$F to 572^{0}F. The cooling water with an inlet condition of 60^{0}F and 0.2561 psi generated about 6 MMlb/hr of steam from the syngas generation unit, with an exit temperature and pressure of 998^{0}F and 1,200 psi. The Synthesis Generation unit represented by block B10 in the Appendix B "U-O-S Block Section". The inlet and outlet streams are represented by streams 2, 7, & 9 in Appendix A, and Appendix B "Stream Section".

3.4.4 Fischer-Tropsch (FT) Synthesis

The synthesis gas (CO & H_2) produced is fed in the right stoichiometric combination into the FT reactor, to produce a mixture of highly paraffinic synthetic hydrocarbons. These hydrocarbons are primarily straight-chain paraffins, with the chain reaction occurring at temperature of 428-662°F.

The reaction continues via chain propagation with addition of $-CH_2-$ groups adding to the primarily paraffinic, linear hydrocarbon chains. There are three output streams from the FT reactors, the higher hydrocarbons (C_{5+}) stream which is used for middle distillates production, the lower hydrocarbon (C_2-C_4) streams which can be used for Liquefied Petroleum Gas (LPG) and the by-product streams – low BTU tail gas (CO, H_2 & CH_4) & steam.

This reaction is carried out in either tubular fixed-bed or slurry phase catalytic reactors. The chemistry of the reaction is represented as:

$nCO + 2nH_2$ _ $-nCH_2- + nH_2O$ (4)

The key assumption is that the catalyzed reaction proceeds only in the forward reaction; while the reactors operate at a fairly constant temperature and pressure, hence eliminating any side reactions especially the methanation reaction (reverse steam reforming).

$CO + 3H_2 \leftrightarrow CH_4 + H_2O$ (5)

Based on the process model in Aspen Plus, the exit steam stream from the FT process is about 1.32 MMlb/hr at 662^0C and 435 psia. The FT Synthesis unit represented by block B6 in the Appendix B "U-O-S Block Section". The inlet and outlet streams are represented by streams 12 & 14 in Appendix A, and Appendix B "Stream Section".

3.4.5 Product Upgrade

This is the last stage where the high paraffinic FT liquids are selectively isocracked into GTL fuels – diesel fuel, naphtha, and other liquid petroleum or specialty products. The addition of the hydrogen in the hydrocracking process, breaks the long-chained waxy hydrocarbons into diesel and naphtha, and stabilizes the products by removing some olefins and oxygenates in the lighter products.

The whole concept of the Integrated GTL Power-Generation process as illustrated in Figure 3.1 is based on ways to economically optimize the heat loss

through the byproduct streams - steam and tail-gas streams, for commercial power generation. Most of the heat losses occur during the FT processes because its reactions are highly exothermic.

Since, the GTL processes have around 60% thermal efficiency which results to about 40% heat loss within the system, the key step to a cost-effective design is to integrate the energy requirements within the GTL process.

3.5 Power Generation

The steam power plant is a large-scale heat engine in which the working fluid (water) is in steady-state flow successively through a pump, a boiler, a turbine, and a condenser in a cyclic process{Smith, *2005}*. The steam power system is based on simple ideal Rankine cycle, with the key design point being the elimination of the boiler section as illustrated in Fig. 3.1.

The high-pressured (HP) and low-pressured (LP) steam streams from the syngas generation and FT process units respectively are already in the superheated steam state.

Hence, the boiler section in the conventional steam power system design is practically by-passed. This design reduces the capital investment in the plant, since the boiler section requires heavier construction and more expensive materials of construction. It should also be noted that the HP and LP streams are treated separately in the power generation cycle.

The Rankine cycle works based on a cooling stage with a complete condensation of the steam, yielding saturated liquid which is normally pumped to the boiler in the conventional steam power plant represented by Figure 3.2. The

typical Rankine cycle can be described in four steps described as follows: {*Smith et al 1996*}.

1->2: A constant-pressure (isobaric) heating process in a boiler.

2->3: Reversible, adiabatic (isentropic) expansion of vapor in a turbine to the pressure of the condenser.

3->4: A constant-pressure (isobaric), constant-temperature (isothermal) process in a condenser to produce saturated liquid.

4->5: Reversible, adiabatic (isentropic) pumping of the saturated liquid to the pressure of the boiler, producing subcooled liquid.

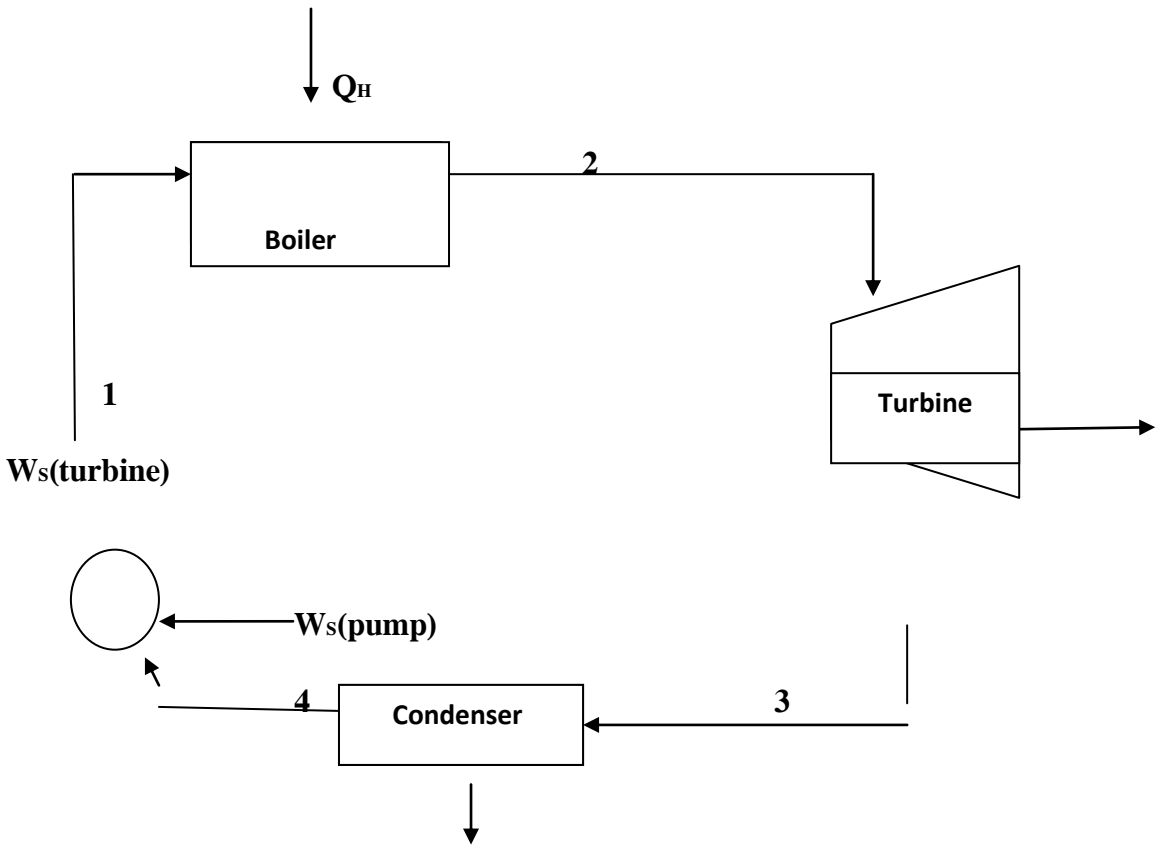

Figure 3.2-Simple Steam Power Plant

The design of the steam power plant was done using the Steam System Assisted Tool, as illustrated in Fig. 3.2. In this work, the design requirements involve the treatment and

recycling of the saturated liquid as cooling water for the exothermic syngas generation

and FT synthesis processes as illustrated in Fig. 3.1.

The power rating, $Ws\ (net)$, from the steam power cycle can be determined using equation 5. Given the heat supplied to the boiler; the heat rejected from the condenser and the steam mass flow rate, the power rating can be calculated.

$$m[Q(boiler) + Q(condenser)] = -Ws\ (net) \ldots\ldots\ldots \quad (5)$$

The thermal efficiency of the steam power cycle, which increases with higher boiler

pressure and temperatures, is calculated by the following equations

$$\eta = \frac{[Ws\ (net)_s]}{Q(boiler)} \quad \ldots.(6)$$

$$Ws = \frac{Ws}{m} \quad \ldots..(7)$$

$$Q(boiler) = H_2 - H_1 \quad \ldots.\ (8)$$

H_1 is determined from the exit steam conditions of the pump, H_2 from inlet steam

conditions to the turbine, and W_s from the power rating of the turbine.

The detailed results of the power rating of the steam plant with 70% of the combined steam streams from the syngas generation and FT synthesis units are shown in Table 3.1. The thermal efficiencies of the steam plant, calculated based on the operating conditions of the heating system and net work done by the shaft is about 25% and 20% for the HP and LP steam cycles respectively. Detailed calculations showing the evaluation of the thermal efficiencies for the 70% steam supply case is shown in Appendix C.

Alongside typical GTL fuel products, about 37, 75, and 522 MW of commercially available power can be generated daily for the case of 5%, 10%, and 70% steam supply respectively.

Table 3.1-Steam Power Plant Parameters (70% Steam Supply Case)

Power Plant Parameters	HP	LP
Steam Mass Flow Rate(MMlb/hr	**4.2**	**0.9**
Inlet Turbine Pressure (psi)	**1,200**	**435**
T1 (^oF)	**126.00**	**126.00**
T1 (^oK)	**325.37**	**325.37**
T2 (^oF)	**998.00**	**660.00**
T2 (^oK)	**699.81**	**622.04**

Ws (net-Btu/lb)	**358.82**	**262.42**
Q (heater-Btu/lb)	**1,470.11**	**1,311.08**
Thermal Efficiency	**25%**	**20%**

3.6 Integrated GTL Power-Generation Competitive Advantage

The competitive advantages of the Integrated GTL Power-Generation process are:

1. World market for middle distillates is relatively very high.
2. Premium and superior quality of GTL fuels.
3. High market demand for cleaner fuels and low cost chemical feedstock.
4. Strategic diversification for commercial power supply.
5. Monetizes waste heat to improve costs.
6. Enhances the profitability of the overall GTL project.

ECONOMIC ANALYSES OF LNG, GTL & INTEGRATED GTL POWER GENERATION PROCESSES

3.7 Evaluate Plant Economics

The key step to the successful implementation of the Integrated GTL Power-Generation process is to evaluate its commercial feasibility. The economic analysis is performed based on the following steps below:

1. Develop an annual cash flow for typical stand-alone GTL, LNG, and integrated GTL power-generation projects.

2. Highlight the economic and process assumptions for the variable components of the cash flow.

a) Economic Assumptions

- 1 Bcf/d feed gas volume.
- 20-year plant life.
- Capital cost amortized over 10-year period.
- Corporate tax rate taken as 30%.
- Royalties taken as 12.5%.
- Discount rate taken as 10%.
- Cost escalating at 3% per annum.
- Depreciation following a straight-line model.
- Capital expenditure (CAPEX) acquired at Year 0 while, active production starts in Year 1.
- All costs exclusive of gas-field development.

b) Process Assumptions

- GTL process has thermal efficiency of about 60%.
- Natural gas has heating value of around 1,000 Btu/ft^3.
- GTL product breakdown: Diesel oil (75%), naphtha (20%), and liquefied petroleum gas (5%).
- Carbon efficiency around 90%.
- Gas-liquid product conversion ratio about 10,000 scf/bbl.

- Steam recycle ratio of 70%.

c) Cost Assumptions

- LNG CAPEX estimated as $2 billion.
- GTL CAPEX estimated as $28,000/bpd of plant capacity.
- Power plant CAPEX estimated as $1,000/kW.
- Unit operation and maintenance cost for the power plant about 1 cent/kW-h.

3. Determine the following economic indicators on the basis of the after-tax cash flow for the three cases (stand-alone LNG, GTL, and Integrated GTL Power-Generation systems).

- Net present value (NPV).
- Internal rate of return (IRR).
- Profitability index (PI).
- Payback period (PBP).
- Annual operating expenditure.
- Initial capital expenditure.
- Annual revenue.

3.8 Definition of Economic Terms

The yardsticks used to measure the profitability of these projects reflect the time value of money. There are three main elements considered to determine the

attractiveness of any investment: investment amount, the operating benefits, and the economic life.

3.8.1 Net Present Value

NPV also referred to as the present value of cash surplus or present worth, is obtained by subtracting the present value of periodic cash outflows from the present value of periodic cash inflows. {*Mian,2002*}. It describes a measure of capital created over and above the hurdle rate. It is used both to screen projects and rank alternative investments. To screen projects, those with NPV greater than zero, positive NPV, at hurdle rate are acceptable while, those with NPV less than zero, negative NPV are rejected. In ranking alternative investments, project with highest NPV is best project among mutually exclusive investment opportunities.

3.8.2 Internal Rate of Return

IRR measures the effective rate of return earned by an investment as though the money had been loaned at that rate. It describes the discount rate at which the NPV is exactly equivalent to zero, or the present value of cash inflows is equal to the present value of cash outflows. The IRR is used in screening projects to identify those that are to be accepted. If the IRR is greater than the hurdle rate, the project is accepted, otherwise the project is rejected.

3.8.3 Profitability Index

PI describes the dimensionless ratio of the present value of future operating cash flow for a project to the present value of total investment over its entire life. This measure describes the relative profitability of investment, the present value of benefits per present worth of every dollar invested in the project. The PI is used both in screening and ranking projects. In the screening process, projects with PIs greater than 1 are accepted while; those with PI less than 1 are rejected. As a ranking tool, projects are measured from the highest PI to the lowest. Companies generally prefer projects with the highest PI because it maximizes the corporate NPV.

3.8.4 Payback Period

Payback period is defined as the expected number of years required to recover initial project investment. It is calculated based on the time required for the cumulative discounted net cash flow to be exactly equal to zero. Generally, companies prefer investment with a shorter payback period.

3.9 Economics of LNG Plants

A typical world class LNG plant of capacity about 6.4 million tons/year which requires about 1 Bcf/day of feed gas is assumed for this study. It is estimated that the efficiency losses in the LNG value chain are: 9% at the liquefaction stage, 1% during transportation and 2% at the re-gasification point. The gas sale price was assumed to be $4.50/MMBtu with a natural gas heating value of 1,000 Btu/cf. {*Coyle et al, 2003*}

3.9.1 Capital Expenditure

The breakdown of the LNG capital expenditure[11] for this study is:

- Gas liquefaction cost - $1.75 billion
- Re-gasification cost - $0.25 billion

Typically, the liquefaction cost is the most expensive of the LNG value chain. The total investment cost required for the LNG plant is estimated as $2 billion. The investment cost is exclusive of the capital expenditure incurred for shipping purposes either by procurement or charter of LNG ships. It is further assumed that the cost of transportation is fully accounted as part of the daily operating expenses of the plant.

3.9.2 Operation Expenditure

The operating expenditure[11] is broadly grouped as:

- Feed gas OPEX - $0.50/MMBtu
- Non-feed gas OPEX - $1.90/MMBtu
- Liquefaction cost - $1.00/MMBtu
- Shipping cost - $0.60/MMBtu
- Re-gasification cost - $0.30/MMBtu

The operating expenditure (including the feed gas cost) averaged over the 20 year

operational plant life is around $1.01 billion/year.

3.9.3 Revenue

The net revenue (including federal & private royalties) generated from the sale of LNG, based on an assumed unit gas price of $4.50/MMBtu and spread over the 20 year operational plant life is about $1.68 billion/year. {*Current oil and gas prices 2004}*.

3.10 Economics of GTL Plants

A large scale GTL plant with plant capacity of 100,000bbls/day and requires 1 Bcf/day of feed gas is considered for the economic analysis in this study. The product breakdown from the GTL process strongly depends on the process operating conditions, the choice of the optimum synthesis gas route and Fischer-Tropsch reactor. {*Fischer et al, 2003*}. The GTL product breakdown which is also used in this study is:

- Diesel Oil – 75%
- Naphtha – 20%
- LPG – 5%

3.10.1 Capital Expenditure

The capital cost currently estimated for GTL plants range from $25,000-$30,000/bbl. {*Gas to Liquid Technology,chemlink 2005}*. In this study, a capital cost of $28,000/bbl is assumed to compensate for location effects. The breakdown of the GTL capital expenditure[13] for this study is:

- Syngas production – 30%
- FT Synthesis – 15%
- Product work-up – 10%

- Utilities – 15%
- Offsites – 20%

Based on the unit capital cost, the total investment cost required for the GTL plant is

estimated at $2.8 billion/year.

3.10.2 Operation Expenditure

The operating expenditure, with an assumed natural gas heating value of 1,000 Btu/cf is broadly grouped as:

- Feed gas OPEX
- Free associated gas - $0/MMBtu
- Non-associated gas - $0.5/MMBtu
- Non-feed gas OPEX - $6.00/bbl of product

The operating expenditure (including the feed gas cost) averaged over the 20-year operational plant life is around $533 million/year.

3.10.3 Revenue

The product pricing for GTL fuels is highly dependent on the proximity to the target market, and it differs for different locations. The average GTL products price based on the product breakdown is:

- Diesel Oil – $30/bbl
- Naphtha – $25/bbl
- LPG – 7cents/litre (equivalent to $12/bbl)

The net revenue (including royalties) generated from the sale of the GTL fuels & LPG, spread over the 20-year operational plant life is about $1.18 billion/year. {*Current oil and gas prices 2005*}.

3.11 Economics of Integrated GTL Power-Generation Plants

It has already been established that GTL processes have around 60% thermal efficiency. The basis for the Integrated GTL Power-Generation concept in this study is the utilization of the 17% heat loss through the by-product steam stream. The three case scenarios studied were when 5%, 10%, and 70% of the by-product steam stream is supplied to the power generating unit. {*Knott, 2002*}. Alongside typical GTL fuel products, about 37, 75, and 522 MW of commercially available power can be generated daily for the case of 5%, 10%, and 70% steam supply respectively.

3.11.1 Capital Expenditure

Apart from the unit capital cost of the GTL plant, an additional capital cost of about $1000/kW is incurred on the power plant. {*Performance of Generating Plant, 2001*}. The investment cost for the power plant is about $6 million, $12 million, and $85 million for the case of 5%, 10%, and 70% steam supply respectively. Hence, the total investment cost for the Integrated GTL Power-Generation plant is around $3.11 billion, $3.13 billion and $3.46 billion for the three cases studied respectively.

3.11.2 Operation Expenditure

The unit operation & maintenance cost for the power plant is about 1 cent/kW-h, which means an additional operating expenditure of $4 million/year and $9 million/year,and $60 million/year for the case of 5%, 10% and 70% steam supply respectively, averaged over the 20-year operational plant life. The total operating expenditure (including the GTL plant operating expenses) averaged over the 20-year operational plant life is around $530 million/year, $540 million, and $590 million/year for the case of 5%, 10%, and 70% steam supply respectively. {Narula et al, 2002}.

3.11.3 Revenue

The product pricing for power produced is also highly dependent on both the demand and proximity to local market. The average electric tariff varies based on the service provider, the electric tariff is about 6.50 and 15.90 cents/kW-h for government funded

and privately provided power respectively. {*Tyler,2002*}. The additional revenue (including royalties) from the sale of the electricity is about $43 million/year, $87 million/year, and $606 million/year, which gives a net revenue of about $1.23 billion, $1.27 billion, and $1.72 billion over the 20-year operational plant life, for the case of 5%, 10%, and 70% steam supply respectively.

Table 3.11 – Cash Flow Analysis Results										
Factors	**LNG**		**GTL**		**GTL-Power (5% Steam Supply)**		**GTL-Power (10% Steam Supply)**		**GTL-Power (70% Steam Supply)**	
Gas Price ($MMBtu)	0.0	0.5	0.0	0.5	0.0	0.5	0.0	0.5	0.0	0.5
NPV ($billion)	2.51	1.46	2.06	1.01	2.21	1.18	2.35	1.31	3.91	2.32
Internal Rate Return (%)	28	22	20	15	22	18	24	19	32	30
Profitability Index	1.88	1.51	1,73	1.36	1.79	1.42	1.84	1.47	2.40	2.02
Payback Period (years)	1.50	3.00	3.00	8.50	2.50	6.50	2.50	6.50	1.50	3.00
Operating Cost ($ billion/yr)	0.84	1.01	0.29	0.53	0.29	0.53	0.30	0.54	0.35	0.59
Capital Cost	2.00		2.80		3.11		3.13		3.46	
Revenue ($ billion/year	1.68		1.18		1.23		1.27		1.72	
Power Generation (MW)	-		-		37		75		522	

3.12 Capital Budgeting: LNG, GTL & Integrated GTL Power Systems

The result of the economic analysis is presented in Table 3.1. The net present value (NPV), which refers to the revenue (discounted), generated by the investment, is highest for the Integrated GTL Power-Generation plants with 70% steam supply. The NPV is about $2.32 billion for the case of 70% steam supply, while for the associated gas case the NPV increases to $3.91 billion. The NPV for the LNG project is about $2.51 billion and $1.46 billion for the associated and non-associated gas cases, higher than the integrated GTL projects with 5% and 10% steam supply and stand-alone GTL project, but significantly lower than the integrated GTL Power-Generation project with 70% steam supply.

The internal rate of return (IRR) which is a measure of profitability and the marginal efficiency of the capital investment have the maximum value for the Integrated GTL Power-Generation project with 70% steam supply. The IRR is about 30% and 32% for the non-associated gas and associated gas respectively. This is a significant improvement compared with both the 5% and 10% steam supply cases. The IRR for the LNG project is about 28% and 22% for the associated and non-associated gas respectively, which is significantly lower than the Integrated GTL Power-Generation projects, and is not profitable at typical hurdle rates of 30%.

The profitability index (PI), which is a measure of the amount of present value benefits is generated for each dollar invested is highest for the Integrated

GTL Power-Generation project with 70% steam supply, with a PI of about 2.40 and 2.02 for associated and nonassociated gas cases respectively. This means for each $1 invested, the integrated GTL project with 70% steam supply delivers $2.4 and $2.0 for the associated and nonassociated gas cases respectively. The LNG project on the other hand delivers $1.88 and $1.50 for every dollar invested, for the associated and non-associated gas cases respectively.

The payback period or breakeven point, which describes the expected number of years required for recovering the initial investment, is practically the same for the Integrated GTL Power-Generation and LNG project at about 1.5 and 3 years for the associated and non-associated gas cases respectively. The other projects including the stand-alone GTL plants take a longer period to breakeven, which translates to a longer waiting period for investment to yield profits.

The economic analysis shows a trend that justifies the choice of the Integrated GTL Power-Generation project with 70% steam supply compared to the LNG or standalone GTL projects. Overall, the profitability indices measured above clearly favors the Integrated GTL project with 70% steam supply as being more economically viable.

CHAPTER IV

RESULTS AND DISCUSSION

4.1 Price Sensitivity

Variations in natural gas and crude oil prices have significant impact on the economics of LNG & GTL plants. Price changes can make hitherto uneconomical projects very profitable. Hence, sensitivity analyses for variations in crude oil price and electric tariff were fully considered and discussed in details in this chapter.

4.1.1 LNG Price Sensitivities

Based on the economic assumptions, a gas sale price of $3.5/MMBtu is not profitable, the NPV is negative and the profitability index is below 1, as illustrated in Table 4.1. The IRR before the project can break even should be greater than 8%.

A gas price shift of $1/MMBtu to $4.5/MMBtu increases the profitability of the plant significantly with the payback period reducing to only three years. The profitability index is between the range 1.51 to 4.62, for a gas price of $4.5 to $10/MMBtu.

The profitability measures presented in Table 4.1 show the significant impact of gas price shifts. The IRR can be as high as 60%, for a gas price of $10/MMBtu,

based on the current economic assumptions. Therefore, gas prices must not be as small as $3.5/MMBtu if LNG projects are to be profitable.

TABLE 4.1 LNG Price Sensitivities

FACTORS	LNG				
Gas price (S/MMBtu)	3.5	4.5	6.5	8.5	10
NPV ($Billion)	(0.14)	1.46	4.67	7.89	10.30
IRR (%)	8.82	21.65	39.03	52.80	61.64
PI	0.95	1.51	2.64	3.77	4.62
PAY BACK PERIOD (years)					

	20+	3.00	0.80	0.80	0.30
REVENUE ($Billion/Year)	1.31	1.68	2.42	3.17	3.73

4.1.2 GTL Price Sensitivities

With a crude oil price of $30/bbl, the IRR is about 15% and NPV of $1.01 billion. The payback period decreases from about 8 years to just 6 months with increasing crude oil prices, as shown in Table 4.2. The IRR can be as high as 40%, for a crude oil price of$70/bbl, based on the current economic assumptions.

TABLE 4.2 GTL Price Sensitivities

FACTORS	**GTL**				
CRUDE OIL PRICE ($bbl)	30	40	50	60	70
NPV ($Billion)	1.01	3.73	5.49	7.20	8.91
IRR (%)	15.0	27.2	33.1	38.3	43.2

	0	5	2	2	5
PI	1.36	2.33	2.96	3.57	4.18
PAY BACK PERIOD (years)	8.50	1.30	0.80	0.60	0.50
REVENUE ($Billion/Year)	1.18	1.81	2.22	2.62	3.02

4.1.3 Integrated GTL Power-Generation Price Sensitivities

The NPV varies from $2.8 to $8.1 billion, $2.9 to $8.5 billion and $3.4 to $11.0 billion for the Integrated GTL Power-Generation projects with 5%, 10%, and 70% steam supply respectively, as shown in Tables 4.3, 4.4, and 4.5.

These shows that at crude oil prices between $40 and $70 and natural gas prices between $4/MMBtu and $10/MMBtu, the IRR, NPV and PI are obviously greater than the LNG and stand-alone GTL projects.

The payback period in the three steam supply cases reduces significantly compared to the stand-alone GTL project. The payback period varies from 6 months to 18 months for the different options of Integrated GTL Power-Generation projects compared to the standalone GTL plants which vary from 6 months to 9 years, with the same crude oil prices. The profitability indices of

the Integrated GTL Power-Generation projects is higher compared with the stand-alone GTL plants for the same crude oil prices, showing that the integrated projects are more profitable than the stand-alone GTL plants at any crude oil prices. The IRR of the integrated plant with 70% steam supply is between 30 and 50%, therefore, the projects will breakeven at discount rates as high as 30%, with crude oil prices varying from $40 to $70.

It can be readily observed that at crude oil prices of about $50/bbl and gas prices of about $6-6.5/MMBtu, both the LNG and GTL projects have very close or even equal economic returns. {*Economides, 2005*.} With the same gas and crude oil prices, Integrated GTL Power-Generation option with 70% steam supply offers greater economic returns compared to both the stand-alone GTL and LNG projects. In terms of PIs, the Integrated GTL Power-Generation project with 70% steam supply varies from 2.23 to 4.95 as compared to 0.95 and 4.62 for both GTL and LNG projects.

TABLE 4.3 – Integrated GTL Price Sensitivities (5% Steam Supply)

FACTORS	**Integrated GTL Price Sensitivities (5% Steam Supply)**			
CRUDE OIL PRICE ($/bbl)	40	50	60	70

ELECTRIC TARIFF	5 10 15.9	5 10 15.9	5 10 15.9	2 10 15.9
NPV ($Billion)	2.81 2.89 2.98	4.52 4.60 4.69	6.23 6.31 6.40	7.94 8.02 8.11
IRR (%)	25.8 26.1 26.3	34.6 34.8 35.0	37.8 37.9 38.1	46.0 43.7 46.3
PI	2.00 2.03 2.07	2.61 2.64 2.68	3.22 3.25 3.29	3.83 3.86 3.90
REVENUE ($Billion/Year)	1.61 1.63 1.65	2.00 2.02 2.05	2.40 2.42 2.44	2.80 2.82 2.84

TABLE 4.4 – Integrated GTL Price Sensitivities (10% Steam Supply)

FACTORS	**Integrated GTL Price Sensitivities (10% Steam Supply)**			
CRUDE OIL PRICE ($/bbl)	40	50	60	70
ELECTRIC TARIFF	5 10 15.9	5 10 15.9	5 10 15.9	5 10 15.9
NPV ($Billion)	2.85 3.02 3.12	4.56 4.73 4.92	6.27 6.44 6.63	7.98 8.15 8.34
IRR (%)	25.9 26.4 26.9	34.6 35.0 35.4	37.8 38.1 38.3	46.0 46.3 46.5

PI	2.02 2.08 2.15	2.63 2.69 2.76	3.24 3.30 3.37	3.85 3.91 3.98
REVENUE ($Billion/Year)	1.63 1.66 1.71	2.02 2.06 2.11	2.42 2.46 2.50	2.82 2.85 2.90

TABLE 4.5 – Integrated GTL Price Sensitivities (70% Steam Supply)

FACTORS	**Integrated GTL Price Sensitivities (70% Steam Supply)**			
CRUDE OIL PRICE ($/bbl)	40	50	60	70
ELECTRIC TARIFF	5 10 15.9	5 10 15.9	5 10 15.9	5 10 15.9
NPV ($Billion)	3.43 4.57 5.92	5.14 6.28 7.63	6.85 7.99 9.34	8.56 9.70 11.0

IRR (%)	31.0 34.0 36.6	35.2 37.2 39.1	38.0 45.3 47.0	46.0 47.4 48.8
PI	2.23 2.63 3.11	2.84 3.24 3.73	3.45 3.85 4.34	4.06 4.46 4.95
REVENUE ($Billion/Year)	1.85 2.12 2.43	2.25 2.25 2.83	2.42 2.91 3.23	3.04 3.31 3.62

CHAPTER V

CONCLUSION AND RECOMMENDATIONS

5.1 Conclusion

GTL plants produce a range of high quality, superior, sulfur-free fuel and chemical feedstock products different from the conventional crude oil refinery. The integration of power generation with GTL fuels creates a strategic diversification for commercial power supply, monetizes waste heat to improve cost, and improves the overall profitability of GTL plants.

The estimates of profitability measures make the Integrated GTL Power-Generation project with 70% steam supply the most profitable of the different options considered. Considering the current gas and crude oil prices, the Integrated GTL Power-Generation project with 70% steam supply can deliver more benefits on each dollar invested compared with the stand-alone GTL & LNG projects. The internal rate of return is greater than 30% for each of the projects with the current gas and crude oil prices, which means the projects will breakeven at a discount rate of 30%.

The estimates of the Integrated GTL Power-Generation plants show that the value-added is unquantifiable in terms of the economics. The key constraint to integrated systems is the availability of market for the generated power.

5.2 Recommendations for Future Work

1. The effects of feed gas compositional variance and carbon conversion efficiencies on the quantity and quality of steam generated from the Syngas generation and FT synthesis units should be considered. The key constraint in the power generation cycle is the quantity and quality of steam supplied into the turbines.

2. A deterministic economic approach was used to analyze cash flow for the different projects. Since, the key issue in GTL projects is economics, a probabilistic approach can be used which gives more information on downside risk.

3. Other methods to improve the thermal efficiencies of the steam plants should be considered, since the steam plant power rating is a direct function of the thermal efficiencies.

REFERENCES

Agee, M.A., Gas-to-Liquids (GTL) Conversion –A New Option for Monetizing Natural Gas, ASME Asia Congress and Exhibition, Singapore.(1997)

Aspen Plus, Vers. 12.1, Aspen Technology Inc, Cambridge, Massachusetts.(2001)

Clarke, S.C. and Ghaemmaghami, B., Taking GTL Forward–Engineering a Gas to-Liquids Project, (2005)

Coyle, D., Durr, C., and Shah, P., LNG: A Proven Stranded Gas Monetization Option, paper SPE 84251 presented at SPE ATCE, Denver.(2003)

Current Oil and Gas Prices, Nymex,(2005)

Davies, P., Sasol Gas-to-Liquids, *Proc.*, 32nd Annual Howard Weil Energy Conference, New Orleans.(2004)

Deshpande, A. and Economides, M.J., CNG: A Competitive Technology to LNG for the Transport of Natural Gas, MS thesis, University of Houston, Department of Chemical Engineering, Houston, Texas.(2004)

Economides, M.J., The Economics of Gas to Liquids Compared to Liquefied Natural Gas, *World Energy Journal* pp **8**, 3-7.(2005)

Fleisch, T., Sills, R., Briscoe, M., and Freide, J.F., Emergence of the Gas-to-Liquids Industry–A Review of Global GTL Developments, *Ingenia* pp **16,** 41-46.(2003)

Fischer, P.A., Natural Gas: How operators will bring 'worthless' gas to market,.(2005)

Gas-to-Liquids: Shell Middle Distillates Synthesis Process and Products, Shell International Gas Ltd., London. (2002)

Gas to Liquids, Chemlink Australasia, (2005)

Ghaemmaghami, B. and Clarke, S.C., GTL: Progress and Prospects–Study yields Generic Coastal-based GTL plant, *Oil & Gas Journal*, pp **99**, 64-68.(2001)

Holmes, J., GTL: Exploiting Remote Gas Discoveries, (2005)

Knott, T., Alchemy in Alaska, *Frontiers Magazine* pp 14-20.(2002)

Lepinski, J.A., Conversion of Coal-Derived Syngas into Ultra-Clean Liquid Fuels and Chemical Feedstocks," FT Solutions, South Jordan, Utah.(2004)

Mian, M.A., *Project Economics and Decision Analysis Volume 1: Deterministic Models*., PennWell Corporation, Oklahoma City, Oklahoma.(2002)

Naha, S., Aguirre, M., Morales, A., Tijani, H., Vargas, L. and Economides, M.J., Gas-to-Liquids (GTL) vs Liquid Natural Gas (LNG): Comparative Economics, MS thesis, University of Houston, Department of Chemical Engineering, Houston, Texas.(2005)

Narula, R.G., Wen, H., and Himes, K., Incremental Cost of CO_2 Reduction in Power Plants, paper GT-2002-30259 presented at the ASME Turbo Expo,Amsterdam.(2002)

NEPA Market in Nigeria, Nigeria Bureau of Public Enterprises, Abuja.(2003)

Performance of Generating Plant, final report World Energy Council, London,UK.(2001)

Putting Energy in the Spotlight - BP Statistical Review of World Energy, BP, London, UK. pp 54, 20-29.(2005).

Rahmim, I.I., Gas-to-Liquid Technologies: Recent Advances, Economics, Prospects, *Proc.*, 26th IAEE Annual International Conference, Prague.(2003)

Smith, R.M., New Developments in Gas-to-Liquids Technologies, (2005)

Smith, J.M., Van Ness, H.C., and Abbot, M.M., *Introduction to Chemical Engineering Thermodynamics.*, McGraw-Hill Companies Inc., Singapore.(1996)

Steam System Assessment Tool, Vers. 2.0.0, United States Department of Energy, Washington, DC.(2004)

The Global Liquefied Natural Gas Market: Status & Outlook, final report DOE/EIA-0637, US DOE/EIA, Washington, DC.(2003)

Tyler, G., Nigeria-Public and Private Electricity Provision as a Barrier to Manufacturing Competitiveness, final report, 221, World Bank, Washington, DC.(2002)

NOMENCLATURE

DOE	=	Department of Energy
S_i	=	+1 for inlet streams, -1 for outlet streams
σ_I	=	Stream scale factor
F_i	=	Mass flow of stream i, lb
f_{ij}	=	Mass fraction of substream j in stream i
Z_{ijk}	=	Mass fraction of component k in substream j of stream i
NM	=	Number of combined inlet and outlet material streams
NH	=	Number of combined inlet and outlet heat streams
NW	=	Number of combined inlet and outlet work streams
NSS	=	Number of substreams within material streams
NC	=	Number of components specified on the Components Specifications or Components Comp-Group forms
h_i	=	Mass enthalpy of stream I, Btu/lb
H_j	=	Heat flow of heat stream j, Btu/lb
W_k	=	Work flow of work stream k, Btu/lb
RHS	=	Right-hand side of the energy balance equation
Ws (net)	=	Net work of cycle, Btu/lb
Ws (pump)	=	Work done by pump shaft, Btu/lb

Ws (turbine)	=	Work done by turbine shaft, Btu/lb
Q (boiler)/ Q_H	=	Heat supplied to boiler, Btu/lb
Q_C	=	Heat rejected from the condenser, Btu/lb
$W\_s(net)$	=	Net cycle work rate or Power rating, Btu/hr or Watts
$m\_$	=	Steam mass flow rate, lb/hr
P_1	=	Turbine steam inlet pressure, psi
P_2	=	Pump steam exit pressure, psi
T_1	=	Turbine steam inlet temperature, psi
T_2	=	Pump steam exit temperature, psi
H_2	=	Enthalpy of superheated steam into turbine, Btu/lb
H_1	=	Enthalpy of saturated liquid exiting pump, Btu/lb
η	=	Thermal efficiency of cycle, %

Subscript

i, j, k	=	Stream notations

Units

Tcf	=	Trillion cubic feet (10^{12} cubic feet)
BOE	=	Barrel of Oil Equivalent
Bcf	=	Billion cubic feet (10^9 cubic feet)
bpd	=	barrel per day
Bcf/D	=	billion cubic feet per day
MW	=	Megawatts (10^6 Watts)
Btu	=	British thermal units

kW-h	=	kilowatts hour